SEC/SUR 6 & 7 TWP 48N RGE 12W

MISSOURI HIGHWAYS AND TRANSPORTATION COMMISSION

(60') Composite Wide Flange Beam Span

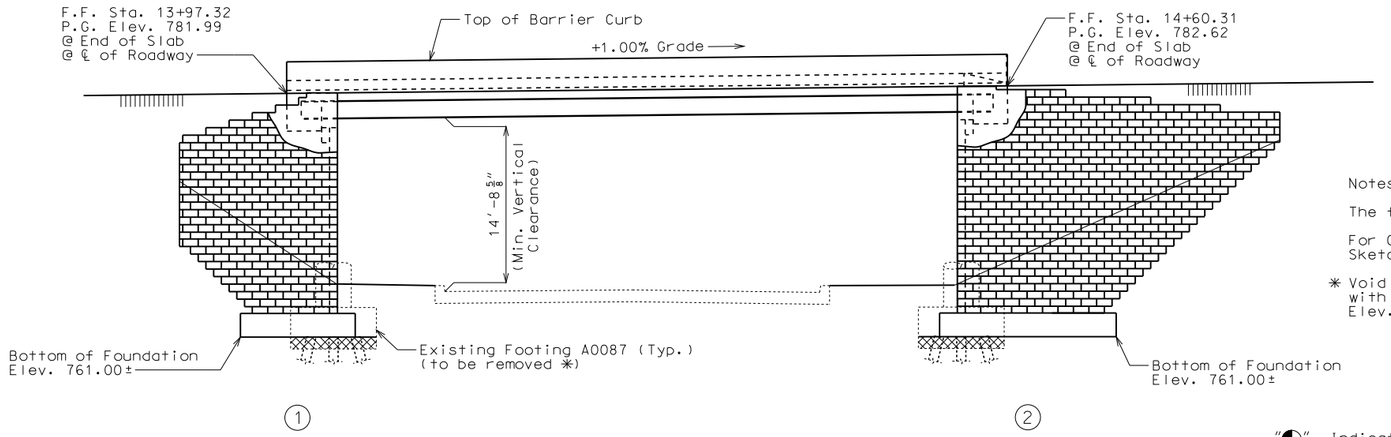

GENERAL ELEVATION

Notes:

The front face of all abutments are parallel.

For General Notes, Estimated Quantities and Location Sketch, see Sheet No. 2.

✳ Void left due to removal of footing to be backfilled with granular material up to the bottom of GRS foundation, Elev. 761.00±.

"◓" Indicates location of borings.

Notice and Disclaimer Regarding Boring Log Data

The locations of all subsurface borings for this structure are shown on the bridge plan sheet for this structure. Boring data for the numbered locations is shown on Sheets No. 19-21. The boring data for all locations indicated, as well as any other boring logs or other factual records of subsurface data and investigations performed by the department for the design of the project, will be provided in the bridge electronic deliverable file or will be available from the Project Contact upon written request. No greater significance or weight should be given to the boring data depicted on the plan sheets than is given to the subsurface data available from the district or elsewhere.

The Commission does not represent or warrant that any such boring data accurately depicts the conditions to be encountered in constructing this project. A contractor assumes all risks it may encounter in basing its bid prices, time or schedule of performance on the boring data depicted here or those available from the district, or on any other documentation not expressly warranted, which the contractor may obtain from the Commission.

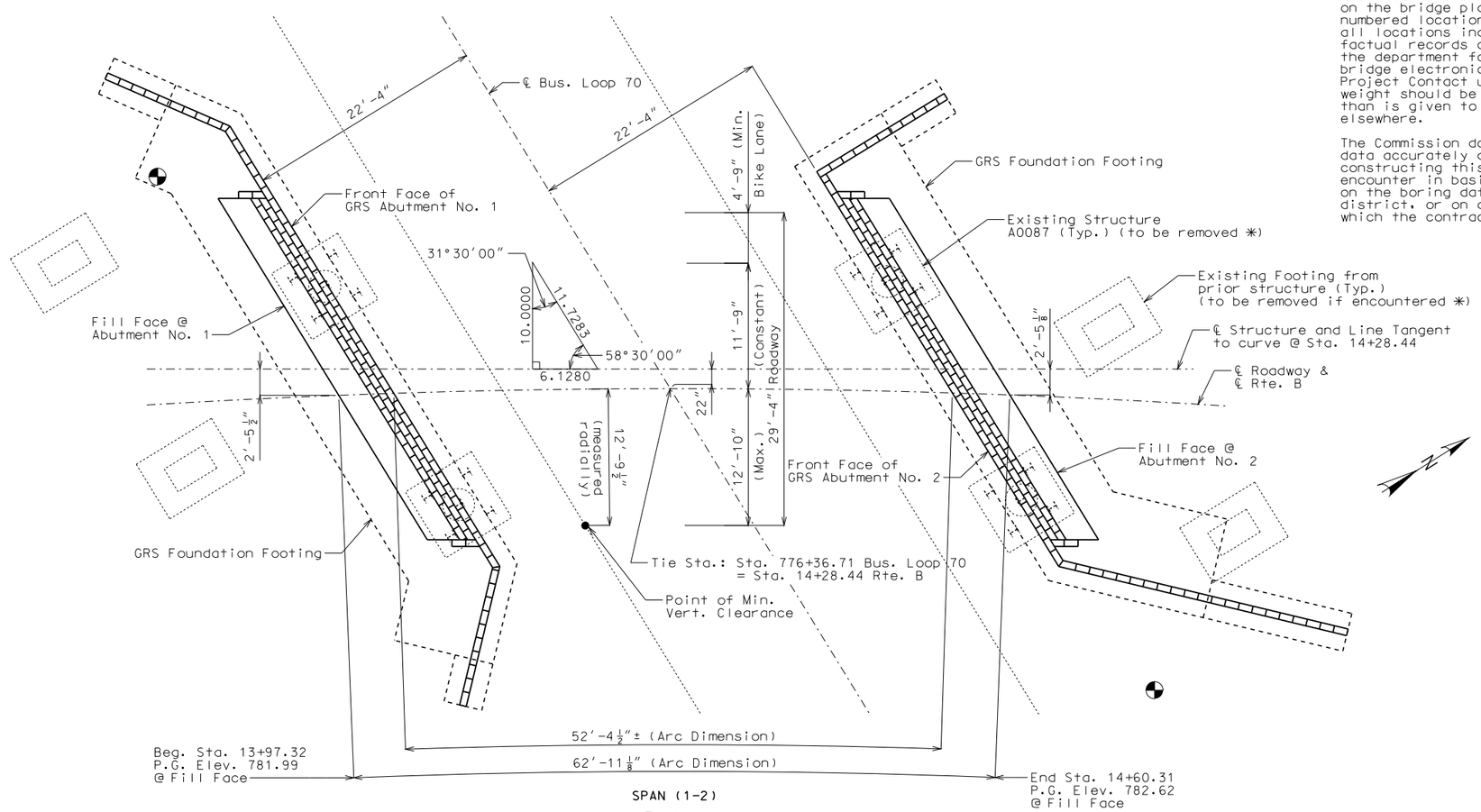

SPAN (1-2)

PLAN

℄ Rte. B

Curve B1
PI = 13+86.21
PC = 12+67.70
PT = 15+02.90
Δ = 16°39'36.0" (RT)
D = 7°05'00.0"
L = 235.20'
T = 118.51'
R = 809.40'
SE = 3.8%

WP#800 - COPPER WELD 25' EAST OF RTE. B EP.
63.5' SOUTH OF BUS. LOOP 70. MOD. COORDS.
X=1694152.6356 Y=1139920.1427 Z=780.37

BRIDGE OVER BUS. LOOP 70

STATE ROAD FROM RTE. 763 TO RTE. 63

ABOUT 1.1 MILES NORTHWEST OF RTE. 763

STA. 14+28.44

STEEL WIDE FLANGE SUPERSTRUCTURE ALTERNATE

STD. 617.10
STD. 706.35

Designed Feb. 2014
Detailed Jan. 2014
Checked Mar. 2014

Note: This drawing is not to scale. Follow dimensions.

STATE OF MISSOURI
ANOUSONE AROUNPRADITH
NUMBER PE-29317
PROFESSIONAL ENGINEER

THIS SHEET HAS BEEN SIGNED, SEALED AND DATED ELECTRONICALLY.

DATE PREPARED 4/14/2014

ROUTE	STATE
B	MO
DISTRICT	SHEET NO.
BR	1

COUNTY BOONE

JOB NO. J5S2186

CONTRACT ID.

PROJECT NO.

BRIDGE NO. A8165

DATE	DESCRIPTION

MISSOURI HIGHWAYS AND TRANSPORTATION COMMISSION
105 WEST CAPITOL
JEFFERSON CITY, MO 65102
1-888-ASK-MODOT (1-888-275-6636)

IF A SEAL IS PRESENT ON THIS SHEET IT HAS BEEN ELECTRONICALLY SEALED AND DATED.

General Notes:

Design Specifications (Superstructure):

2012 AASHTO LRFD Bridge Design Specifications (6th Ed.) and
2013 Interim Revisions

Design Specifications (GRS Abutments):

Geosynthetic Reinforced Soil Integrated Bridge System Interim Implementation Guide, FHWA-HRT-11-026, January 2011.

Design factor of safety against sliding is ≥ 1.5; Factor of safety against bearing failure is ≥ 2.5.

A global stability analysis shall be performed for each site. Factor of safety against global failure is ≥ 1.5.

Design Loading (Superstructure):

HL-93
35#/Sq. Ft. Future Wearing Surface
Earth 120 #/Cu. Ft., Equivalent Fluid Pressure 45#/Cu. Ft.
Superstructure: Simply-supported, non-composite for dead load.
Composite for live load.

Design Loading (GRS Abutments):

Combined load: Bearing beam pressure = 4.15 ksf (service load, allowable stress design). Roadway live load surcharge: 250 psf uniform vertical

Road Base unit weight = 140 pcf, thickness = 48 inches

Soil Conditions:
Retained backfill: Unit weight = 120 pcf, friction angle = 28°, cohesion = 0 psf, max diameter = 0.5 inches
Foundation soil: Unit weight = 120 pcf, friction angle = 28°, cohesion = 400 psf
Reinforced fill: Unit weight = 140 pcf, friction angle = 40°, cohesion = 0 psf
RSF backfill: Unit weight = 140 pcf, friction angle = 40°, cohesion = 0 psf

Design Unit Stresses:

Class B-1 Concrete (Safety Barrier Curb)	f'c = 4,000 psi
Class B-2 Concrete (Superstructure, except Safety Barrier Curb)	f'c = 4,000 psi
Concrete Modular Unit (CMU) Block	f'c = 4,000 psi
Reinforcing Steel (Grade 60)	fy = 60,000 psi
Structural Steel (ASTM A709 Grade 50)	fy = 50,000 psi
Ultra High Performance Concrete (UHPC)	f'c = 21,000 psi

Fabricated Steel Connections:

Field connections shall be made with 3/4" diameter high strength bolts and 13/16" diameter holes, except as noted.

High strength bolts, nuts and washers will be sampled for quality assurance as specified in Sec 106.

Joint Filler:

All joint filler shall be in accordance with Sec 1057 for preformed sponge rubber expansion and partition joint filler, except as noted.

Reinforcing Steel:

Minimum clearance to reinforcing steel shall be 1 1/2", unless otherwise shown.

Structural Steel Protective Coatings:

Protective Coating: System G in accordance with Sec 1081.

Prime Coat: The cost of the prime coat will be considered completely covered by the contract unit price for the "Optional Superstructure Module". Tint of the prime coat for System G shall be similar to the color of the field coat to be used.

Field Coat: The color of the field coat shall be Grey (Federal Standard #26373). The cost of the intermediate field coat will be considered completely covered by the contract unit price per sq. foot for "Intermediate Field Coat (System G)". The cost of the finish field coat will be considered completely covered by the contract unit price per sq. foot for "Finish Field Coat (System G)".

At the option of the contractor, the intermediate field coat and finish field coat may be applied in the shop. The contractor shall exercise extreme care during all phases of loading, hauling, handling, erection and pouring of the slab to minimize damage and shall be fully responsible for all repairs and cleaning of the coating systems as required by the engineer.

Superstructure Modules:

Fabricator is responsible for design and location of lifting devices, which must be shown on the shop drawings submitted for review and approval of Engineer.

Payment for all materials and labor to fabricate the superstructure modules including steel girders, cover plates, stiffeners, diaphragms, shear studs, anchor bolts, lifting anchors, hardware, connectors, precast concrete deck and epoxy coated reinforcement for deck, backwall and closure pour will be considered completely covered by the contract unit price for Optional Superstructure Module per linear foot.

Concrete Protective Coatings:

Sacrificial graffiti protective coating shall be applied on all exposed faces of CMU blocks in accordance with Sec 711.

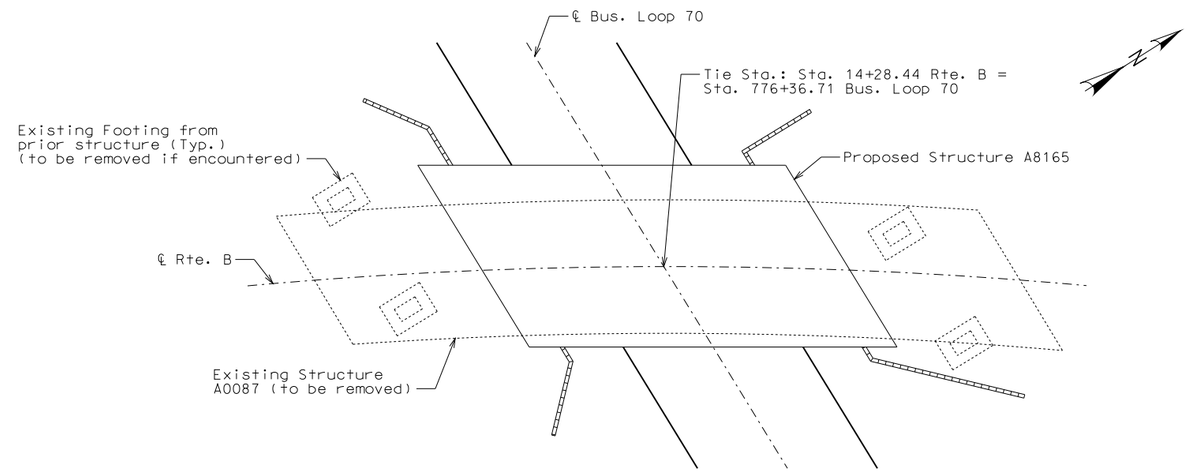

LOCATION SKETCH

Ultra High Performance Concrete (UHPC):

Mock pours of UHPC joints will be required prior to field assembly of superstructure modules (See Special Provisions). Each longitudinal, transverse and vertical closure pour shall be constructed in one continouos pour. Cost of mock pours is incidental to construction of precast elements and will not be paid separately.

Ultra High Performance Concrete (UHPC) shall be used for cast-in-place joints in superstructure. UHPC shall be in accordance with Special Provisions.

Traffic Handling:

Structure to be closed during construction. See roadway plans for traffic control plan.

A minimum vertical clearance of 14'-0" from crown of existing lanes and a minimum lateral clearance of 24'-0" centered on existing lanes shall be maintained during construction.

Removal of Existing Bridge:

Remove A0087 per Standard Specifications, except that Bents 2 & 3 footings shall be removed to bottom of footing. Existing steel piles may remain in place after removal of existing footing up to an elevation of 760.50. Additionally, footings remaining from previous bridge within limits of wall shall be removed.

Temporary Shoring:

If temporary shoring is required, cost of temporary shoring will be considered completely covered by the contract lump sum price for GRS-IBS Abutment No. 1 or GRS-IBS Abutment No. 2.

Estimated Quantities

	Item		Substr.	Superstr.	Total
***	Class 1 Excavation	cu. yard	520		520
	Removal of Bridges (A0087)	lump sum			1
	Diamond Grinding	sq. yard		224	224
*	Safety Barrier Curb	linear foot		125	125
	Ultra High Performance Concrete (UHPC)	linear foot		252	252
	Optional Superstructure Module	linear foot		315	315
	Conduit System on Structure	lump sum			1
	Sacrificial Graffiti Protection System	lump sum			1
	Intermediate Field Coat (System G)	sq. foot		3400	3400
	Finish Field Coat (System G)	sq. foot		400	400
	Bicycle Railing	linear foot		61	61
**	GRS-IBS Abutment No. 1	lump sum			1
**	GRS-IBS Abutment No. 2	lump sum			1

* Safety barrier curb shall be cast-in-place option for left safety barrier curb only and shall be cast-in-place option or slip-form option for right safety barrier curb.

All reinforcement in the longitudinal joints will be considered completely covered by the contract unit price for Optional Superstructure Module per linear foot.

** Payment for all materials, equipment and labor to construct the GRS-IBS Abutment (does not include excavation and bearing beam) including Select Granular Fills, Geosynthetic Reinforcement, CMU Facing Blocks, grout and reinforcing steel will be considered completely covered by the contract lump sum price for GRS-IBS Abutment No. 1 or GRS-IBS Abutment No. 2.

*** Includes all excavation required to build each GRS-IBS Abutment.

STATE OF MISSOURI
ANOUSONE AROUNPRADITH
NUMBER PE-29317
PROFESSIONAL ENGINEER
THIS SHEET HAS BEEN SIGNED, SEALED AND DATED ELECTRONICALLY.

DATE PREPARED 4/21/2014
ROUTE B | STATE MO
DISTRICT BR | SHEET NO. 2
COUNTY BOONE
JOB NO. J5S2186
CONTRACT ID.
PROJECT NO.
BRIDGE NO. A8165

DESCRIPTION | DATE

MISSOURI HIGHWAYS AND TRANSPORTATION COMMISSION
105 WEST CAPITOL
JEFFERSON CITY, MO 65102
1-888-ASK-MODOT (1-888-275-6636)

IF A SEAL IS PRESENT ON THIS SHEET IT HAS BEEN ELECTRONICALLY SEALED AND DATED.

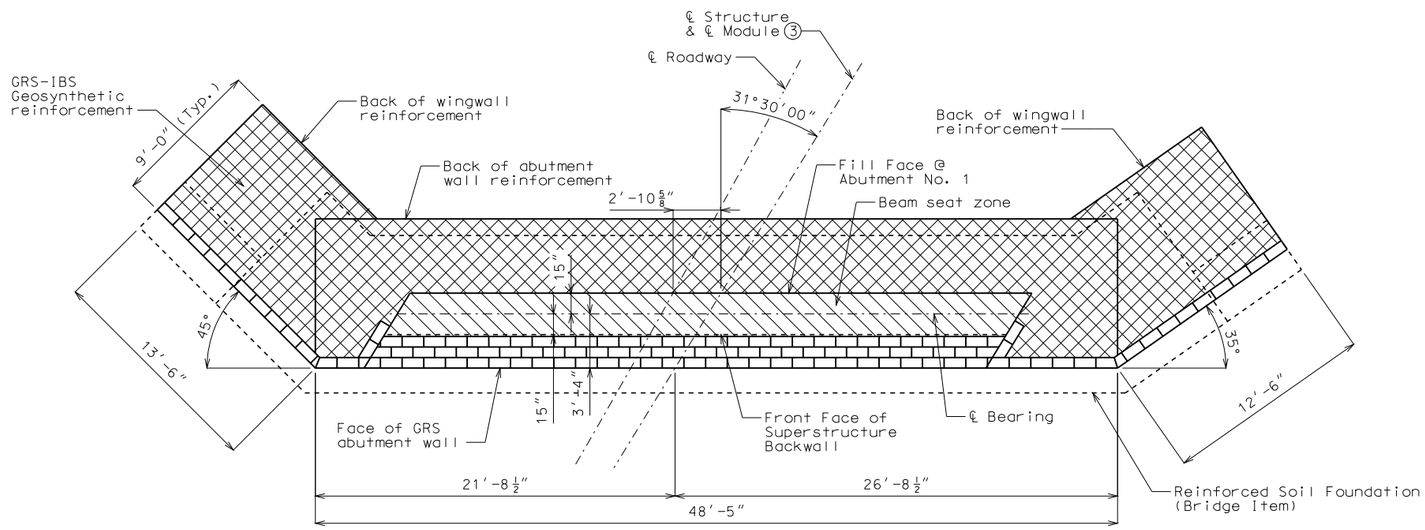

PLAN VIEW

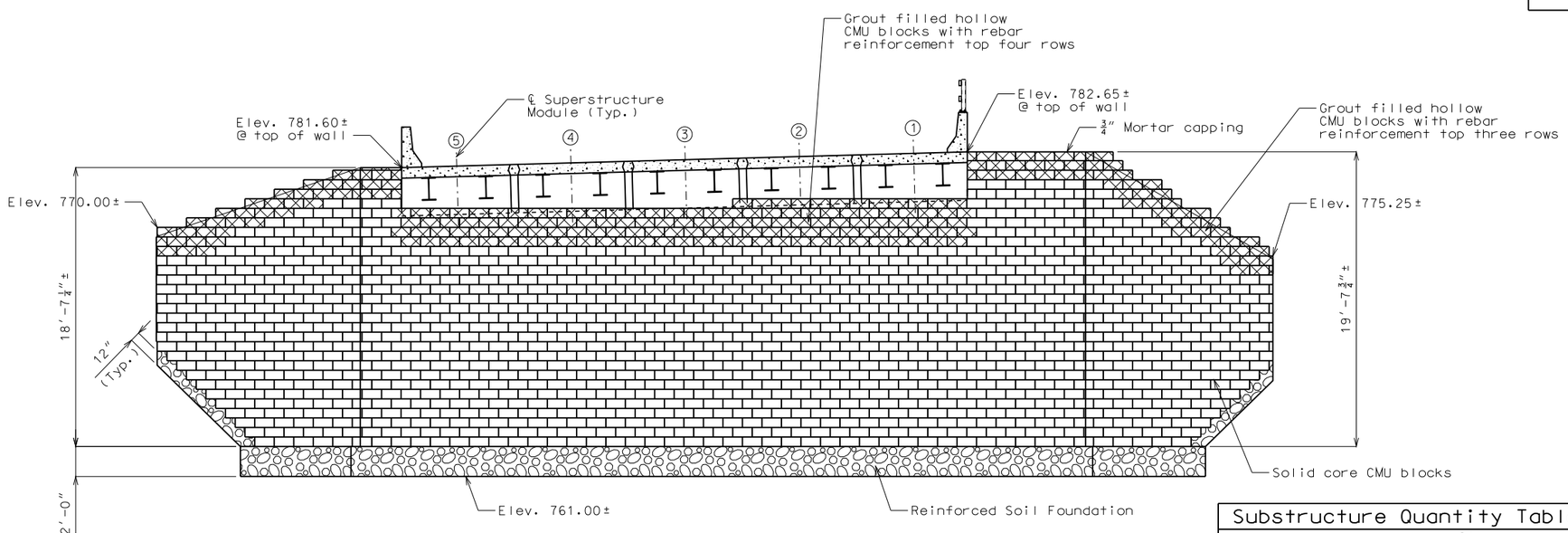

DEVELOPED ELEVATION VIEW

Notes:

Insert epoxy coated #4 rebars 27″ long into the top 3 rows of CMU's and all corner CMU's and fill with grout.

CMU blocks are staggered, including corners, so there are no vertical joints greater than 1 CMU block height.

For CMU Block configuration underneath bridge, see Section Thru GRS-IBS.

All CMU blocks shall be grey with a split face pattern.

All CMU blocks shall be solid, except as shown.

Apply Class 2 Penetrating Concrete Sealer to all exposed faces of CMU blocks prior to graffiti protection. See Job Special Provisions.

Bottom of Backwall Elevations @ ℄ Superstructure Modules & ℄ Bearing	
Module No.	Elevation (ft)
1	779.31
2	779.09
3	778.88
4	778.66
5	778.45

Substructure Quantity Table for GRS-IBS Abutment No. 1		
Item		Quantity
Class 1 Excavation	cu. yard	275
GRS-IBS Abutment No. 1	lump sum	1

Note: These quantities are included in the estimated quantities table on Sheet No. 2.

DETAILS OF GRS-IBS ABUTMENT NO. 1

Detailed Mar. 2014
Checked Apr. 2014

Note: This drawing is not to scale. Follow dimensions.

STEEL WIDE FLANGE SUPERSTRUCTURE ALTERNATE

STATE OF MISSOURI
ANOUSONE AROUNPRADITH
NUMBER PE-29317
PROFESSIONAL ENGINEER

THIS SHEET HAS BEEN SIGNED, SEALED AND DATED ELECTRONICALLY.

DATE PREPARED	
4/16/2014	
ROUTE B	STATE MO
DISTRICT BR	SHEET NO. 3
COUNTY BOONE	
JOB NO. J5S2186	
CONTRACT ID.	
PROJECT NO.	
BRIDGE NO. A8165	

DATE	DESCRIPTION

MISSOURI HIGHWAYS AND TRANSPORTATION COMMISSION
105 WEST CAPITOL
JEFFERSON CITY, MO 65102
1-888-ASK-MODOT (1-888-275-6636)

IF A SEAL IS PRESENT ON THIS SHEET IT HAS BEEN ELECTRONICALLY SEALED AND DATED.

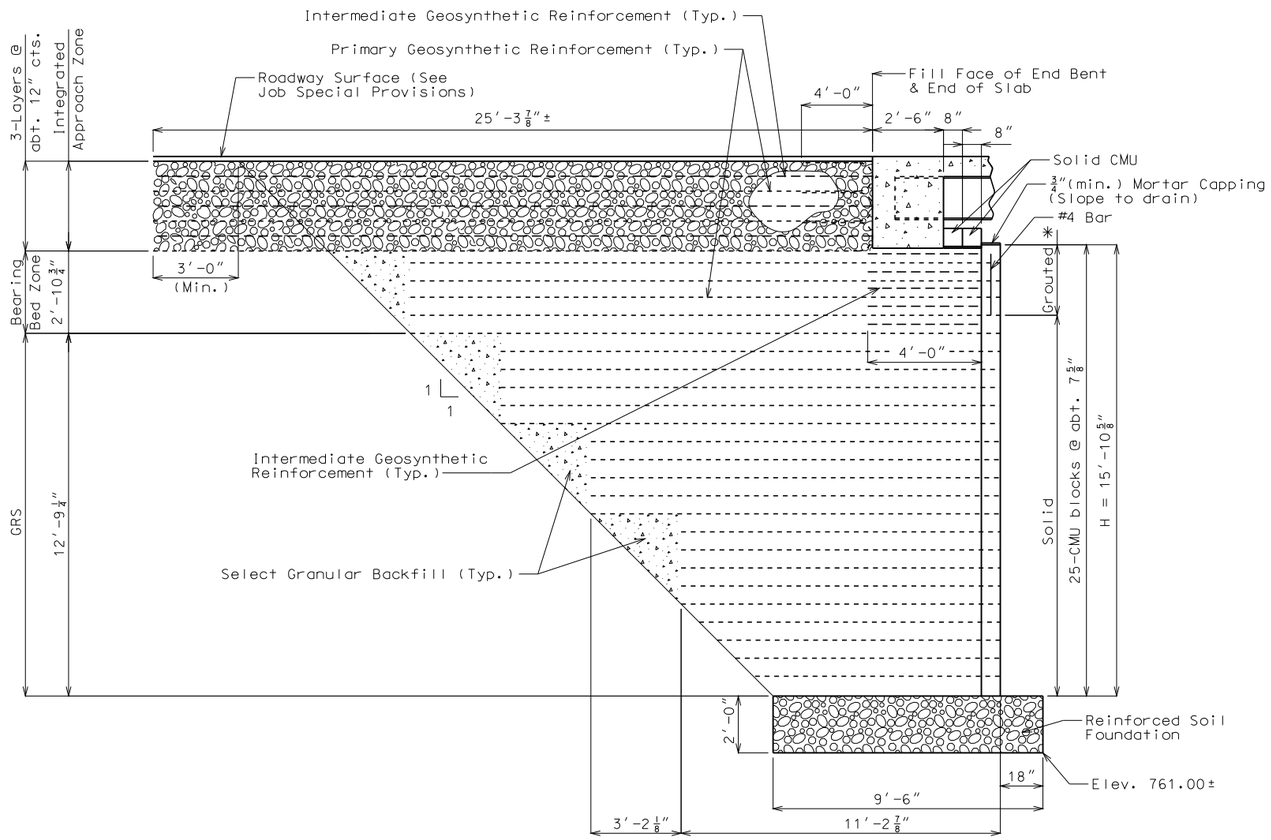

SECTION THRU GRS-IBS

Notes:

Insert epoxy coated #4 rebars 27" long into the top 3 rows (top 4 rows under bridge) of CMU's and all corner CMU's above solid blocks and fill with grout. Trim geosynthetic reinforcement to facilitate filling of hollow CMU's with grout.

On the top row of CMU's create a mortar capping approx. 3/4 inch thick.

Vertical wall face batter = 0°.

Provide a minimum of 5 layers of bearing bed reinforcement. Additional top layers should be sloped to accomodate for superelevation.

Primary wrap reinforcement vertical spacing for the integrated approach is a maximum of 12 inches.

Extend integrated approach zone layers past cut slope at least 3'-0".

Integrated approach zone primary reinforcement shall have a minimum of 4 foot tail.

A bituminous paint coating shall be applied to the extents of the fill face of superstructure backwall. The cost of coating superstructure backwall will be considered completely covered by the contract unit price for other items.

✳ Fill with grout along the whole width of bridge.

DETAILS OF GRS-IBS ABUTMENT NO. 1

Detailed Mar. 2014
Checked Apr. 2014

Note: This drawing is not to scale. Follow dimensions.

STEEL WIDE FLANGE SUPERSTRUCTURE ALTERNATE

STATE OF MISSOURI
ANOUSONE AROUNPRADITH
NUMBER PE-29317
PROFESSIONAL ENGINEER

THIS SHEET HAS BEEN SIGNED, SEALED AND DATED ELECTRONICALLY.

DATE PREPARED	
4/14/2014	
ROUTE B	STATE MO
DISTRICT BR	SHEET NO. 4
COUNTY BOONE	
JOB NO. J5S2186	
CONTRACT ID.	
PROJECT NO.	
BRIDGE NO. A8165	

DATE	DESCRIPTION

MISSOURI HIGHWAYS AND TRANSPORTATION COMMISSION
105 WEST CAPITOL
JEFFERSON CITY, MO 65102
1-888-ASK-MODOT (1-888-275-6636)

IF A SEAL IS PRESENT ON THIS SHEET IT HAS BEEN ELECTRONICALLY SEALED AND DATED.

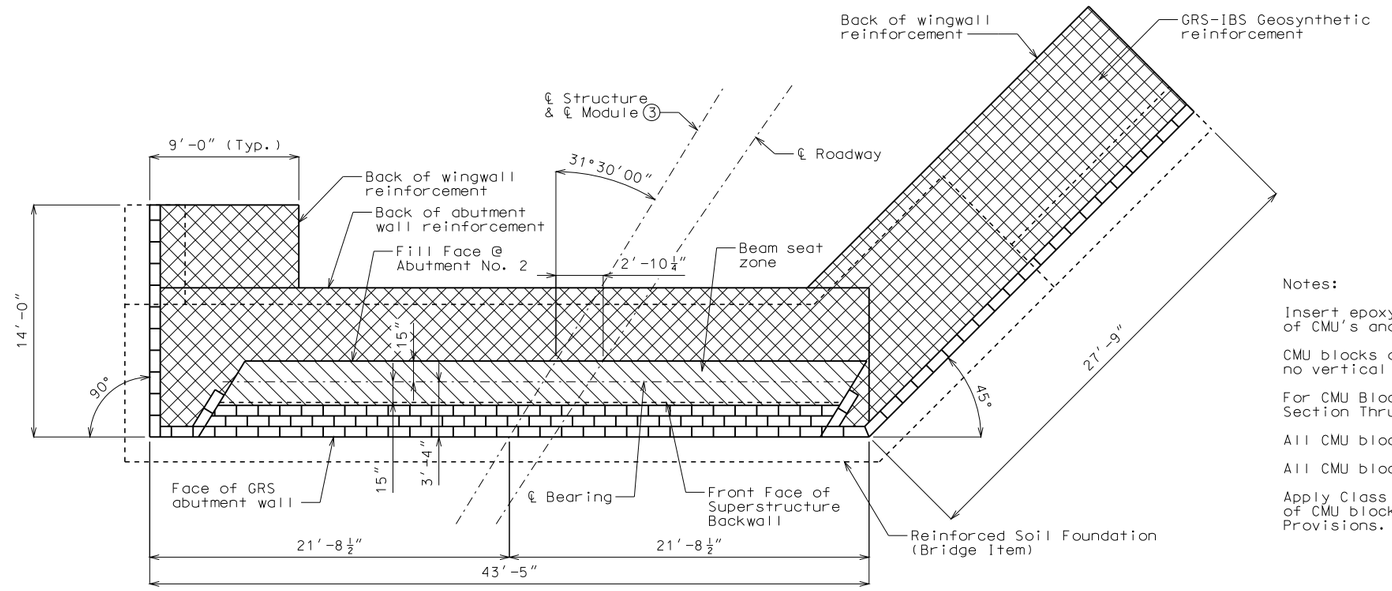

PLAN VIEW

Notes:

Insert epoxy coated #4 rebars 27" long into the top 3 rows of CMU's and all corner CMU's and fill with grout.

CMU blocks are staggered, including corners, so there are no vertical joints greater than 1 CMU block height.

For CMU Block configuration underneath bridge, see Section Thru GRS-IBS.

All CMU blocks shall be grey with a split face pattern.

All CMU blocks shall be solid, except as shown.

Apply Class 2 Penetrating Concrete Sealer to all exposed faces of CMU blocks prior to graffiti protection. See Job Special Provisions.

Bottom of Backwall Elevations @ ℄ Superstructure Modules & ℄ Bearing	
Module No.	Elevation (ft)
1	779.87
2	779.67
3	779.47
4	779.27
5	779.07

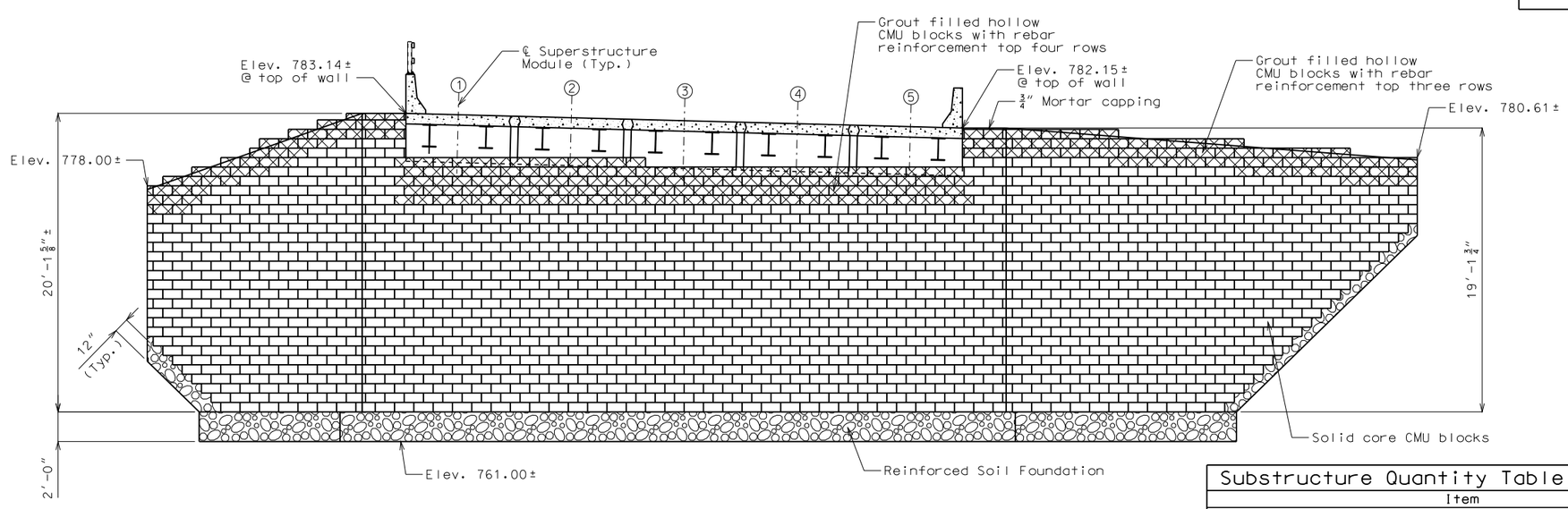

DEVELOPED ELEVATION VIEW

Substructure Quantity Table for GRS-IBS Abutment No. 2		
Item		Quantity
Class 1 Excavation	cu. yard	245
GRS-IBS Abutment No. 2	lump sum	1

Note: These quantities are included in the estimated quantities table on Sheet No. 2.

DETAILS OF GRS-IBS ABUTMENT NO. 2

Detailed Mar. 2014
Checked Apr. 2014

Note: This drawing is not to scale. Follow dimensions.

STEEL WIDE FLANGE SUPERSTRUCTURE ALTERNATE

STATE OF MISSOURI
ANOUSONE AROUNPRADITH
NUMBER PE-29317
PROFESSIONAL ENGINEER

THIS SHEET HAS BEEN SIGNED, SEALED AND DATED ELECTRONICALLY.

DATE PREPARED	
4/16/2014	
ROUTE B	STATE MO
DISTRICT BR	SHEET NO. 5
COUNTY BOONE	
JOB NO. J5S2186	
CONTRACT ID.	
PROJECT NO.	
BRIDGE NO. A8165	

DATE	DESCRIPTION

IF A SEAL IS PRESENT ON THIS SHEET IT HAS BEEN ELECTRONICALLY SEALED AND DATED.

MISSOURI HIGHWAYS AND TRANSPORTATION COMMISSION
105 WEST CAPITOL
JEFFERSON CITY, MO 65102
1-888-ASK-MODOT (1-888-275-6636)

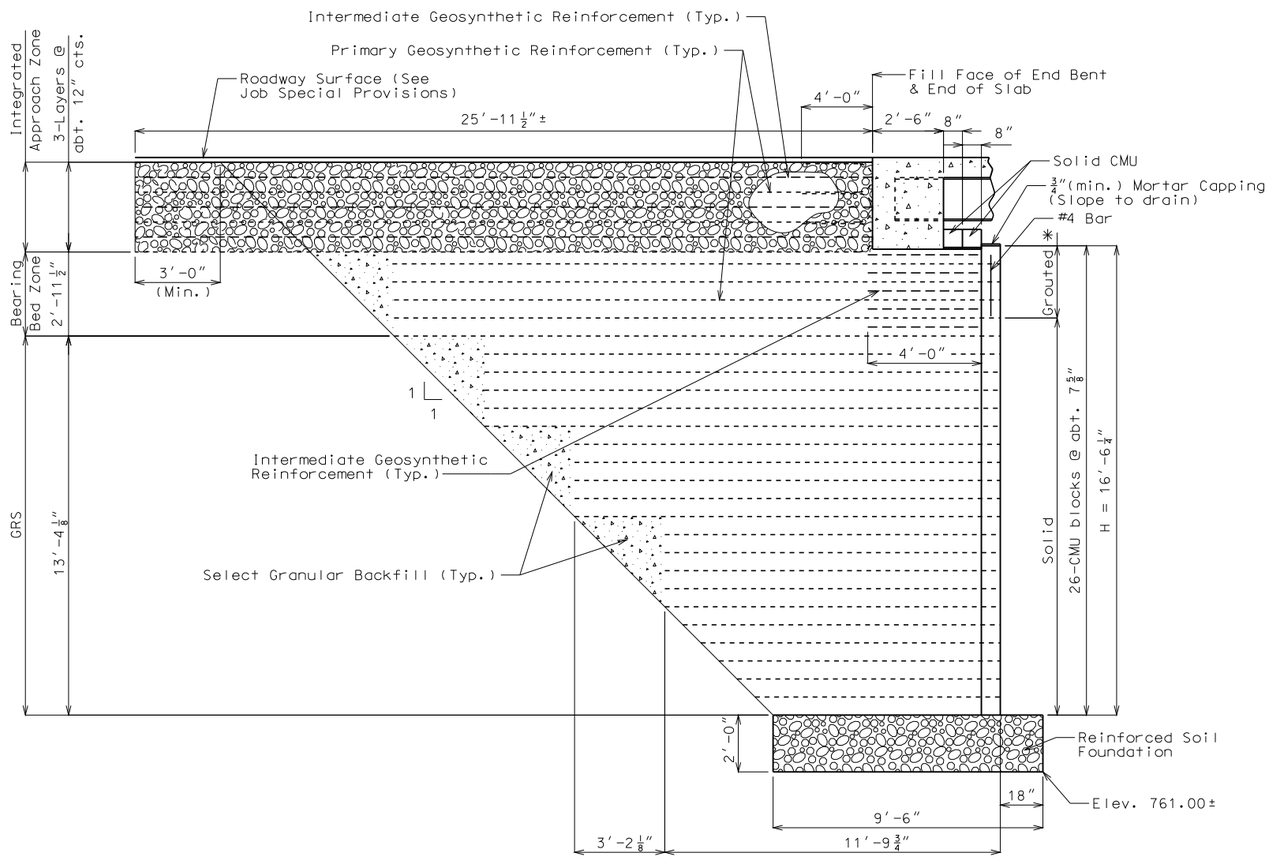

SECTION THRU GRS-IBS

Notes:

Insert epoxy coated #4 rebars 27" long into the top 3 rows (top 4 rows under bridge) of CMU's and all corner CMU's above solid blocks and fill with grout. Trim geosynthetic reinforcement to facilitate filling of hollow CMU's with grout.

On the top row of CMU's create a mortar capping approx. 3/4 inch thick.

Vertical wall face batter = 0°.

Provide a minimum of 5 layers of bearing bed reinforcement. Additional top layers should be sloped to accomodate for superelevation.

Primary wrap reinforcement vertical spacing for the integrated approach is a maximum of 12 inches.

Extend integrated approach zone layers past cut slope at least 3'-0".

Integrated approach zone primary reinforcement shall have a minimum of 4 foot tail.

A bituminous paint coating shall be applied to the extents of the fill face of superstructure backwall. The cost of coating superstructure backwall will be considered completely covered by the contract unit price for other items.

✳ Fill with grout along the whole width of bridge.

DETAILS OF GRS-IBS ABUTMENT NO. 2

Detailed Mar. 2014
Checked Apr. 2014

Note: This drawing is not to scale. Follow dimensions.

STEEL WIDE FLANGE SUPERSTRUCTURE ALTERNATE

STATE OF MISSOURI
ANOUSONE AROUNPRADITH
NUMBER PE-29317
PROFESSIONAL ENGINEER

THIS SHEET HAS BEEN SIGNED, SEALED AND DATED ELECTRONICALLY.

DATE PREPARED	
4/14/2014	
ROUTE	STATE
B	MO
DISTRICT	SHEET NO.
BR	6
COUNTY	
BOONE	
JOB NO.	
J5S2186	
CONTRACT ID.	
PROJECT NO.	
BRIDGE NO.	
A8165	

DATE	DESCRIPTION

MISSOURI HIGHWAYS AND TRANSPORTATION COMMISSION
105 WEST CAPITOL
JEFFERSON CITY, MO 65102
1-888-ASK-MODOT (1-888-275-6636)

IF A SEAL IS PRESENT ON THIS SHEET IT HAS BEEN ELECTRONICALLY SEALED AND DATED.

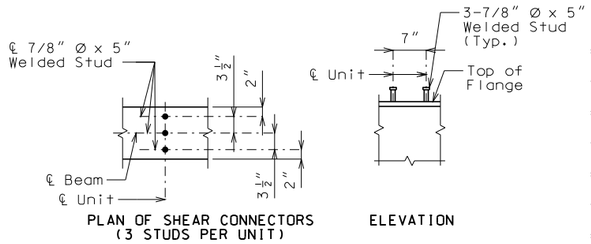

DETAILS OF SHEAR CONNECTOR UNITS

Notes:

Shear connectors shall be in accordance with Sec 712, 1037 and 1080.

The cost of 3104 pounds of shear connectors is included in the lump sum price for Superstructure Module.

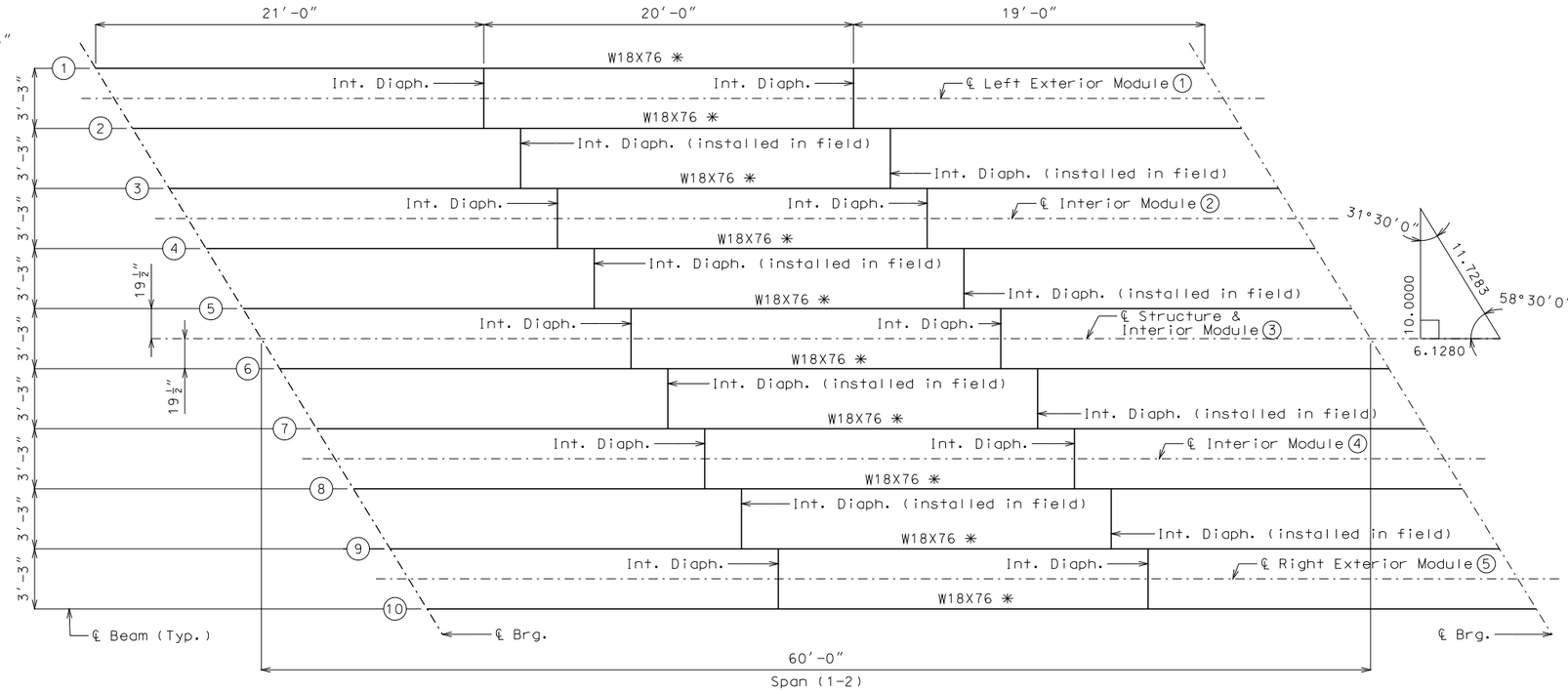

FRAMING PLAN OF STRUCTURAL STEEL FOR SUPERSTRUCTURE MODULES

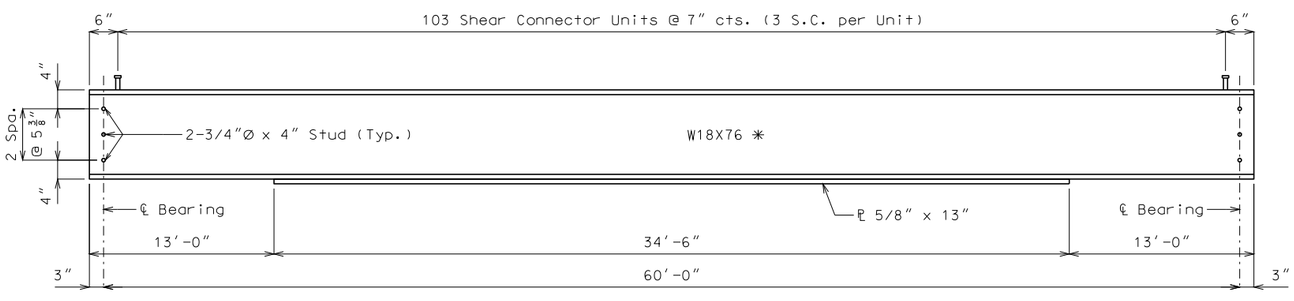

ELEVATION OF BEAM

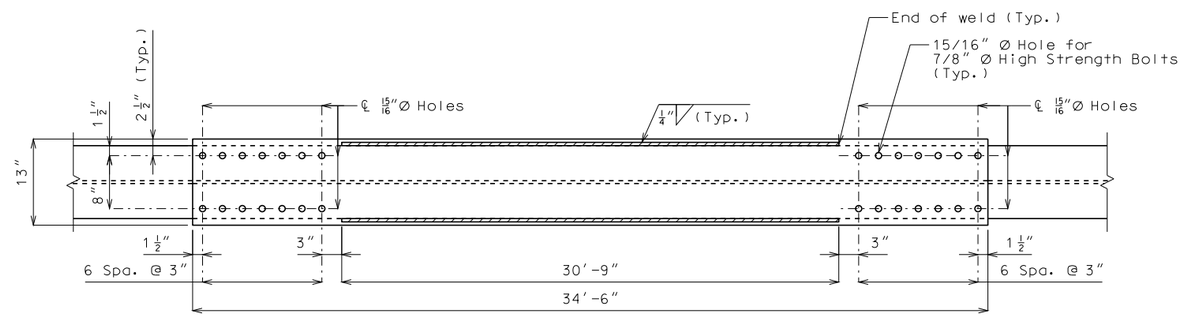

PLAN OF BEAM SHOWING BOTTOM FLANGE COVER PLATE

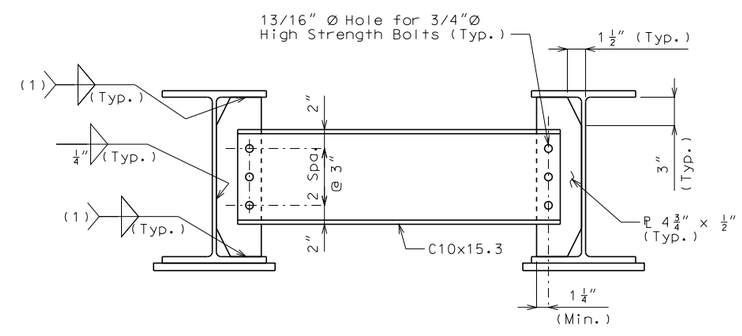

DETAILS OF INT. DIAPHRAGMS

(1) Tight Fit

Notes:
Longitudinal dimensions are horizontal.

Fabricated structural steel shall be ASTM A709 Grade 50.

✳ Notch toughness is required for all wide flange beams.

Bottom flange of all girders shall be horizontal when in final position.

FRAMING PLAN AND STRUCTURAL STEEL DETAILS

Detailed Feb. 2014
Checked Mar. 2014

Note: This drawing is not to scale. Follow dimensions.

STEEL WIDE FLANGE SUPERSTRUCTURE ALTERNATE

STATE OF MISSOURI
ANOUSONE AROUNPRADITH
NUMBER PE-29317
PROFESSIONAL ENGINEER
THIS SHEET HAS BEEN SIGNED, SEALED AND DATED ELECTRONICALLY.

DATE PREPARED	
4/16/2014	
ROUTE B	STATE MO
DISTRICT BR	SHEET NO. 7
COUNTY BOONE	
JOB NO. J5S2186	
CONTRACT ID.	
PROJECT NO.	
BRIDGE NO. A8165	

DATE	DESCRIPTION

MISSOURI HIGHWAYS AND TRANSPORTATION COMMISSION
105 WEST CAPITOL
JEFFERSON CITY, MO 65102
1-888-ASK-MODOT (1-888-275-6636)

IF A SEAL IS PRESENT ON THIS SHEET IT HAS BEEN ELECTRONICALLY SEALED AND DATED.

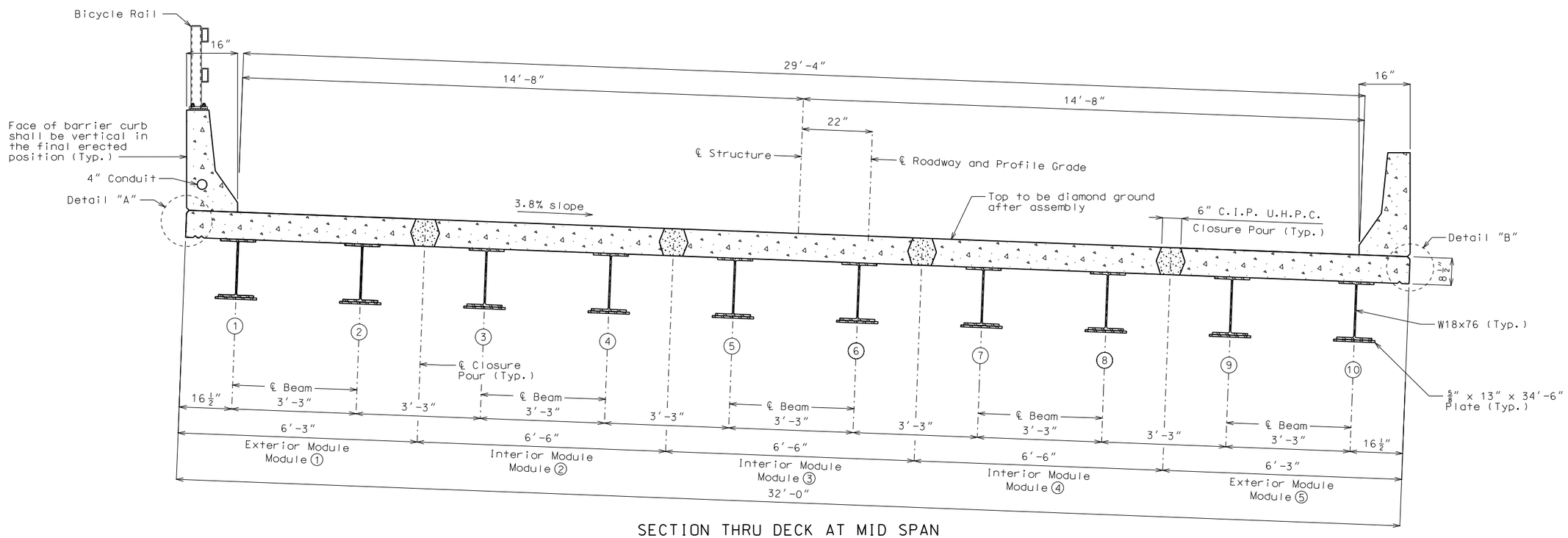

SECTION THRU DECK AT MID SPAN

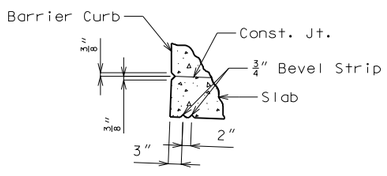

DETAIL "A"

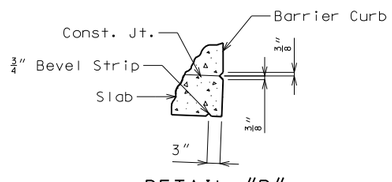

DETAIL "B"

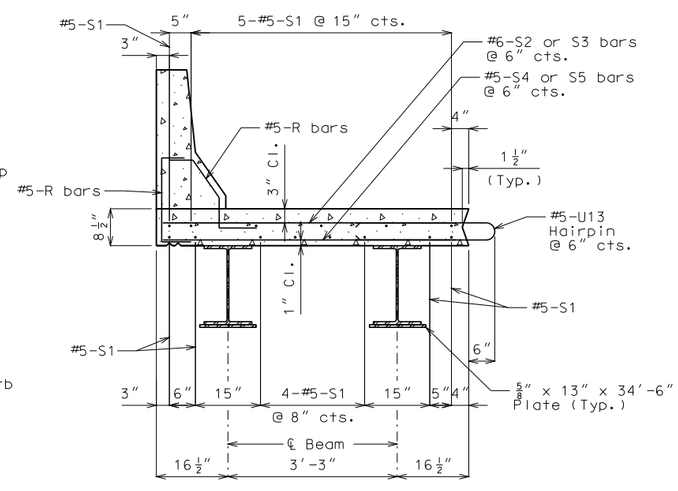

EXTERIOR MODULE REINFORCING DETAIL

(Shear connectors and conduit in barrier curb not shown for clarity)

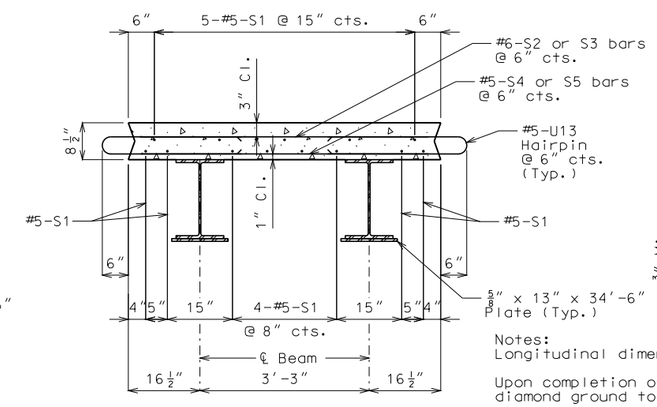

INTERIOR MODULE REINFORCING DETAIL

(Shear connectors not shown for clarity)

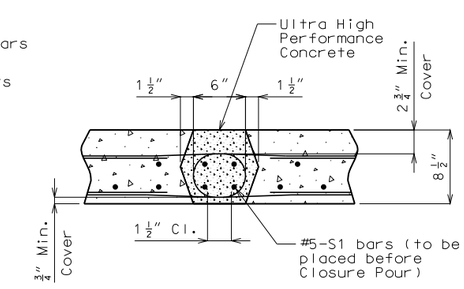

LONGITUDINAL CLOSURE POUR DETAIL

Notes:
Longitudinal dimensions are horizontal.

Upon completion of deck closure pours, top of deck shall be diamond ground to maximum depth of 1/2" and grooved.

For Exterior Superstructure Module Details, see Sheet No. 10.

For Interior Superstructure Module Details, see Sheet No. 11.

For Details and Reinforcement of Safety Barrier Curb not shown, see Sheets No. 13 thru 16.

For Details of Bicycle Rail on Safety Barrier Curb, see Sheet No. 13.

For Details of Conduit System on Structure, see Sheet No. 17.

Bottom flange of all girders shall be horizontal when in final position.

BRIDGE DECK CROSS SECTION

STEEL WIDE FLANGE SUPERSTRUCTRE ALTERNATE

Detailed Mar. 2014
Checked Mar. 2014

Note: This drawing is not to scale. Follow dimensions.

STATE OF MISSOURI
ANOUSONE AROUNPRADITH
NUMBER PE-29317
PROFESSIONAL ENGINEER

THIS SHEET HAS BEEN SIGNED, SEALED AND DATED ELECTRONICALLY.

DATE PREPARED	
4/16/2014	
ROUTE B	STATE MO
DISTRICT BR	SHEET NO. 8
COUNTY BOONE	
JOB NO. J5S2186	
CONTRACT ID.	
PROJECT NO.	
BRIDGE NO. A8165	

DATE	DESCRIPTION

MISSOURI HIGHWAYS AND TRANSPORTATION COMMISSION
105 WEST CAPITOL
JEFFERSON CITY, MO 65102
1-888-ASK-MODOT (1-888-275-6636)

IF A SEAL IS PRESENT ON THIS SHEET IT HAS BEEN ELECTRONICALLY SEALED AND DATED.

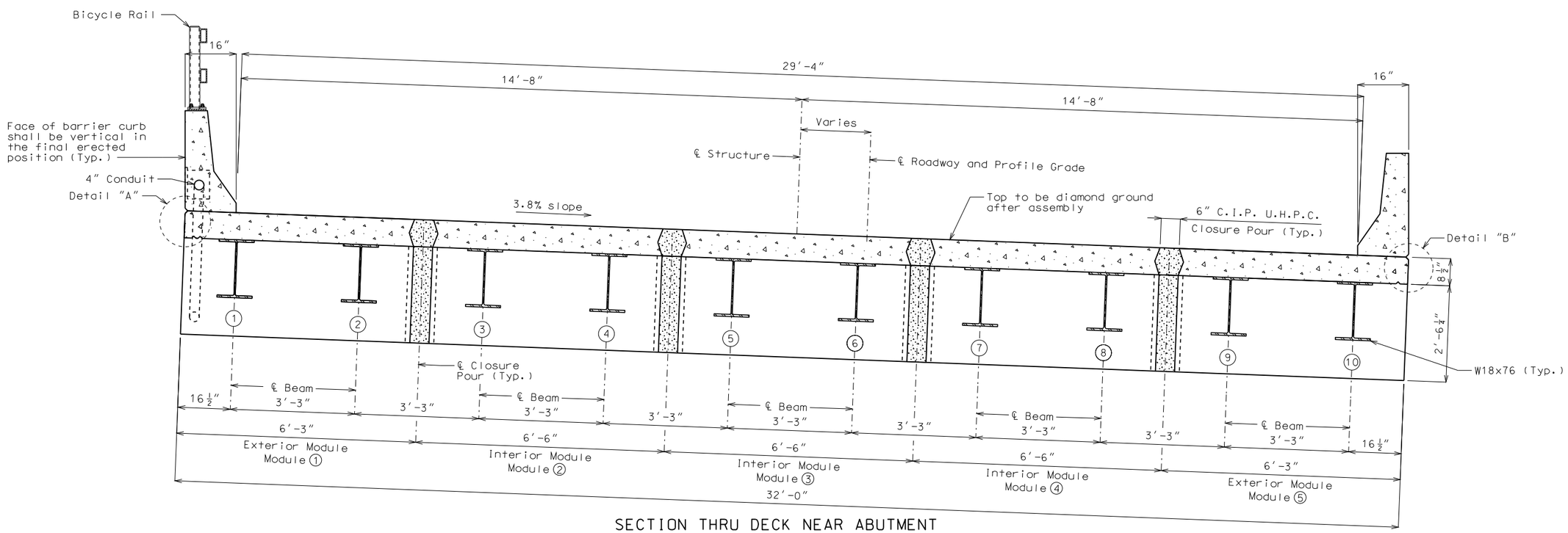

SECTION THRU DECK NEAR ABUTMENT

(Backwall Reinforcement not shown for clarity)

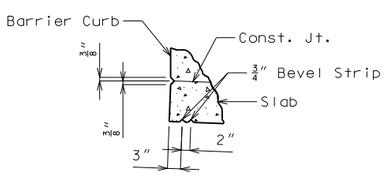

DETAIL "A"

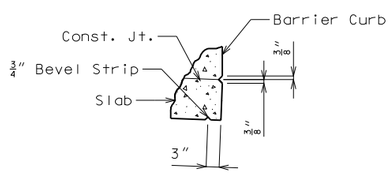

DETAIL "B"

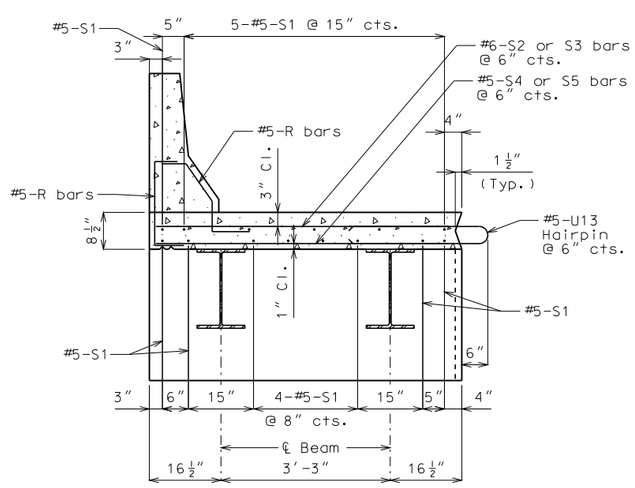

EXTERIOR MODULE REINFORCING DETAIL

(Shear connectors and conduit in barrier curb not shown for clarity)

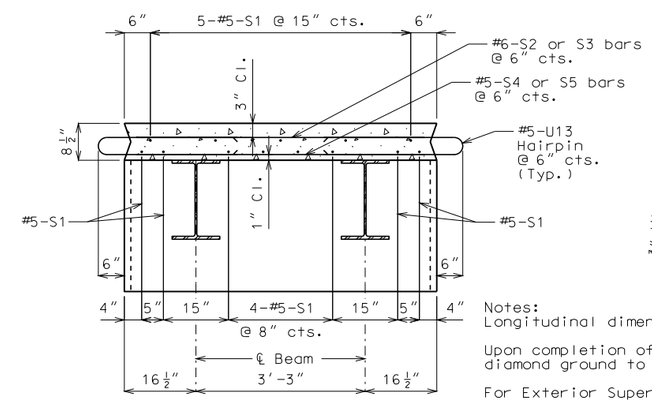

INTERIOR MODULE REINFORCING DETAIL

(Shear connectors not shown for clarity)

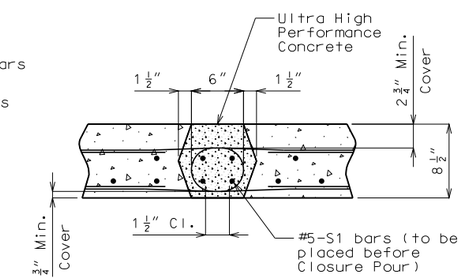

LONGITUDINAL CLOSURE POUR DETAIL

Notes:
Longitudinal dimensions are horizontal.

Upon completion of deck closure pours, top of deck shall be diamond ground to maximum depth of 1/2" and grooved.

For Exterior Superstructure Module Details, see Sheet No. 10.

For Interior Superstructure Module Details, see Sheet No. 11.

For Backwall Reinforcement Details of Superstructure Modules, see Sheet No. 12.

For Details and Reinforcement of Safety Barrier Curb not shown, see Sheets No. 13 thru 16.

For Details of Bicycle Rail on Safety Barrier Curb, see Sheet No. 13.

For Details of Conduit System on Structure, see Sheet No. 17.

Bottom flange of all girders shall be horizontal when in final position.

BRIDGE DECK CROSS SECTION

STEEL WIDE FLANGE SUPERSTRUCTURE ALTERNATE

Detailed Mar. 2014
Checked Mar. 2014

Note: This drawing is not to scale. Follow dimensions.

STATE OF MISSOURI
ANOUSONE AROUNPRADITH
NUMBER PE-29317
PROFESSIONAL ENGINEER

THIS SHEET HAS BEEN SIGNED, SEALED AND DATED ELECTRONICALLY.

DATE PREPARED	4/16/2014
ROUTE	B
STATE	MO
DISTRICT	BR
SHEET NO.	9
COUNTY	BOONE
JOB NO.	J5S2186
CONTRACT ID.	
PROJECT NO.	
BRIDGE NO.	A8165

DATE	DESCRIPTION

MISSOURI HIGHWAYS AND TRANSPORTATION COMMISSION
105 WEST CAPITOL
JEFFERSON CITY, MO 65102
1-888-ASK-MODOT (1-888-275-6636)

IF A SEAL IS PRESENT ON THIS SHEET IT HAS BEEN ELECTRONICALLY SEALED AND DATED.

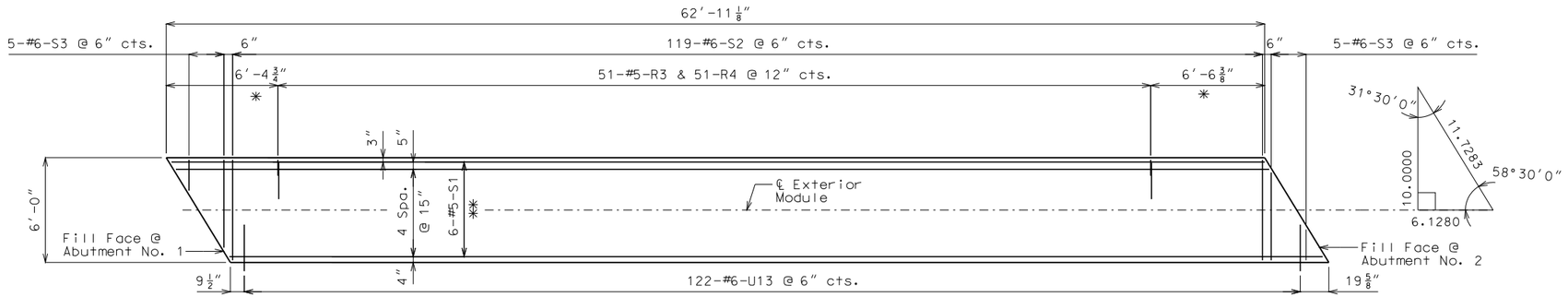

PLAN OF SLAB SHOWING TOP REINFORCEMENT AT EXTERIOR MODULE

(West Exterior Module ① shown, East Exterior Module ⑤ similar)

* K bars spaced as shown on Sheets No. 15 & 16.

** 2 Units @ 32'-8" (Min. Lap 2'-7") (Spa. as shown)

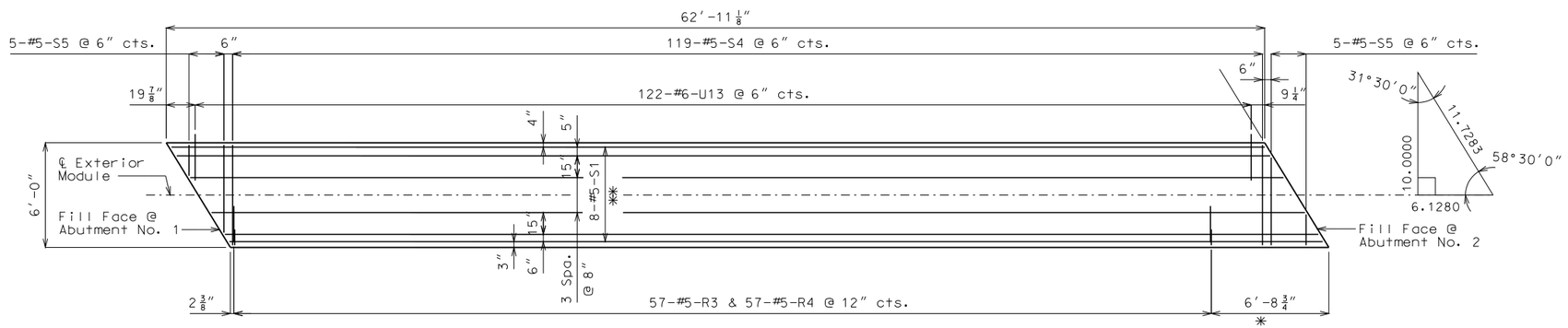

PLAN OF SLAB SHOWING BOTTOM REINFORCEMENT AT EXTERIOR MODULE

(East Exterior Module ⑤ shown, West Exterior Module ① similar)

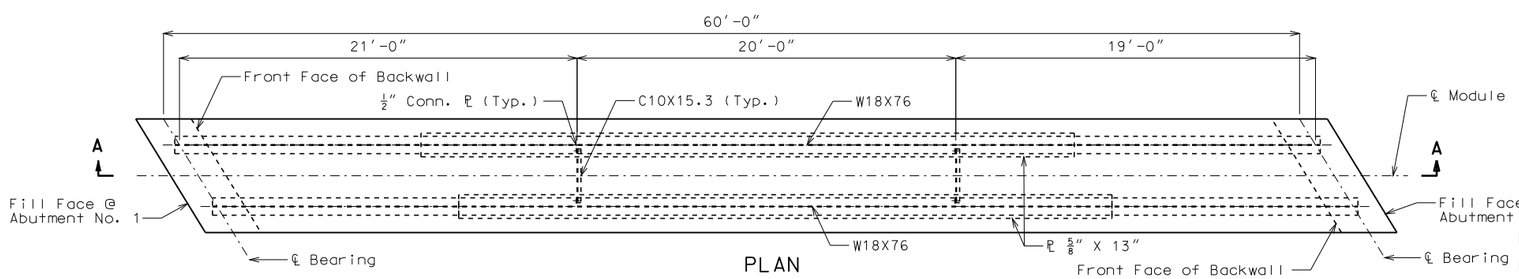

PLAN

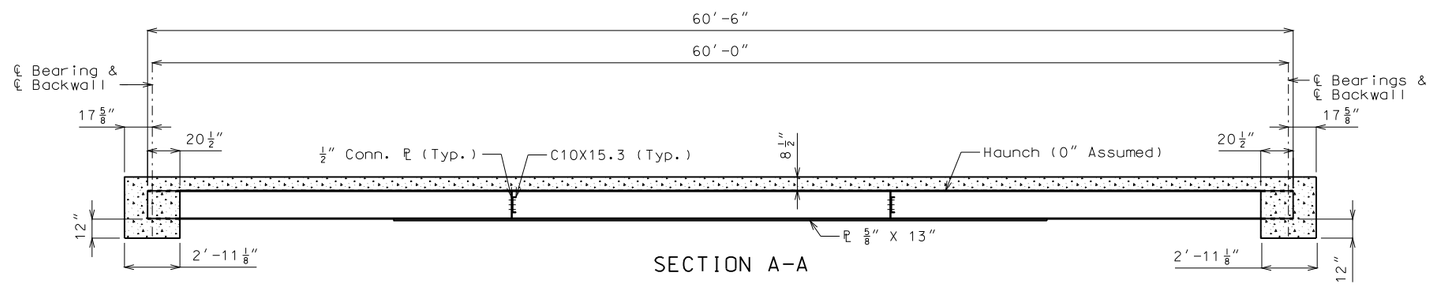

SECTION A-A

Notes:

Upon completion of deck closure pours, top of deck shall be diamond ground to maximum depth of 1/2" and grooved.

Structural steel shall be ASTM A709 Grade 50.

Fabricator shall determine the final camber to ensure that the beams will be flat under dead load with no sag along bottom chord of wide flange beam, which must be shown on the shop drawings.

For diaphragm connection and shear stud details, see Sheet No. 7.

For Backwall Reinforcement Details and Bill of Reinforcing Steel, see Sheet No. 12.

Module should be supported at bearing points during casting operations and storage.

Safety Barrier Curb not shown for clarity.

Fabricator is responsible for design and location of lifting devices, which must be shown on the shop drawings.

Method for picking Module shall not damage or leave holes in the deck. Top of bracket shall not extend above transverse bars.

EXTERIOR SUPERSTRUCTURE MODULE DETAILS

STEEL WIDE FLANGE SUPERSTRUCTURE ALTERNATE

Detailed Mar. 2014
Checked Mar. 2014

Note: This drawing is not to scale. Follow dimensions.

STATE OF MISSOURI
ANOUSONE AROUNPRADITH
NUMBER PE-29317
PROFESSIONAL ENGINEER

THIS SHEET HAS BEEN SIGNED, SEALED AND DATED ELECTRONICALLY.

DATE PREPARED	4/14/2014
ROUTE	B
STATE	MO
DISTRICT	BR
SHEET NO.	10
COUNTY	BOONE
JOB NO.	J5S2186
CONTRACT ID.	
PROJECT NO.	
BRIDGE NO.	A8165

DATE	DESCRIPTION

MISSOURI HIGHWAYS AND TRANSPORTATION COMMISSION

105 WEST CAPITOL
JEFFERSON CITY, MO 65102
1-888-ASK-MODOT (1-888-275-6636)

IF A SEAL IS PRESENT ON THIS SHEET IT HAS BEEN ELECTRONICALLY SEALED AND DATED.

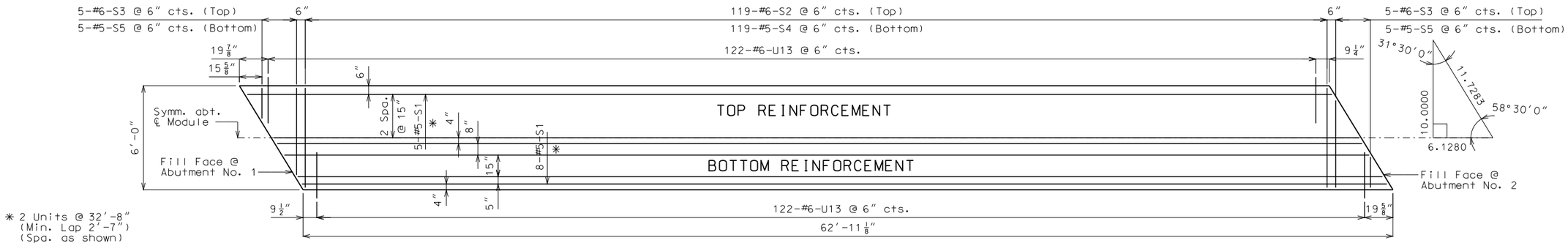

PLAN OF SLAB AT INTERIOR MODULE

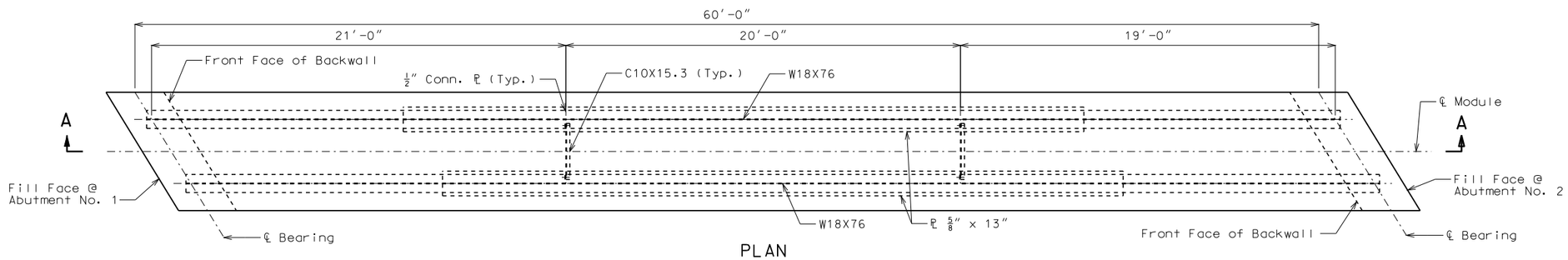

PLAN

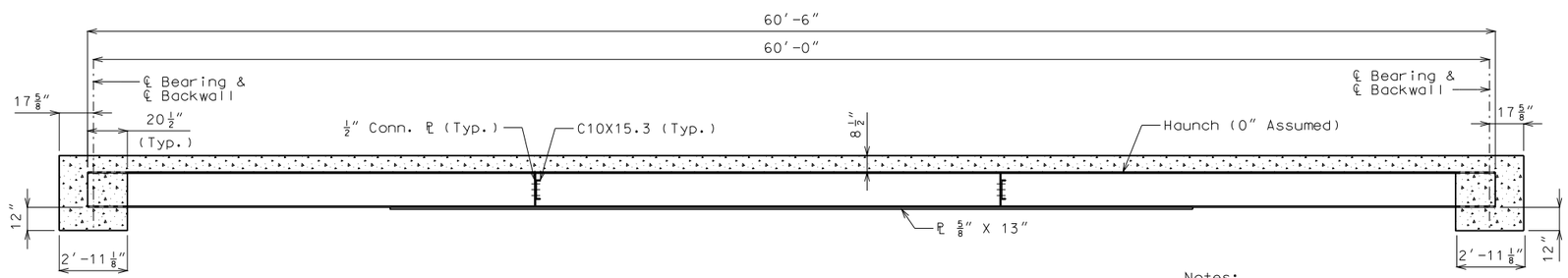

SECTION A-A

Notes:
Upon completion of deck closure pours, top of deck shall be diamond ground to maximum depth of 1/2" and grooved.

Structural steel shall be ASTM A709 Grade 50.

For diaphragm connection and shear stud details, see Sheet No. 7.

Fabricator shall determine the final camber to ensure that the beams will be flat under dead load with no sag along bottom chord of wide flange beam, which must be shown on the shop drawings.

For Backwall Reinforcement Details and Bill of Reinforcing Steel, see Sheet No. 12.

Module should be supported at bearing points during casting operations and storage.

Fabricator is responsible for design and location of lifting devices, which must be shown on the shop drawings.

Method for picking Module shall not damage or leave holes in the deck. Top of bracket shall not extend above transverse bars.

INTERIOR SUPERSTRUCTURE MODULE DETAILS

STEEL WIDE FLANGE SUPERSTRUCTURE ALTERNATE

Detailed Mar. 2014
Checked Mar. 2014

Note: This drawing is not to scale. Follow dimensions.

STATE OF MISSOURI
ANOUSONE AROUNPRADITH
NUMBER PE-29317
PROFESSIONAL ENGINEER
THIS SHEET HAS BEEN SIGNED, SEALED AND DATED ELECTRONICALLY.

DATE PREPARED	4/14/2014
ROUTE	B
STATE	MO
DISTRICT	BR
SHEET NO.	11
COUNTY	BOONE
JOB NO.	J5S2186
CONTRACT ID.	
PROJECT NO.	
BRIDGE NO.	A8165

DESCRIPTION

DATE

MISSOURI HIGHWAYS AND TRANSPORTATION COMMISSION
105 WEST CAPITOL
JEFFERSON CITY, MO 65102
1-888-ASK-MODOT (1-888-275-6636)

IF A SEAL IS PRESENT ON THIS SHEET IT HAS BEEN ELECTRONICALLY SEALED AND DATED.

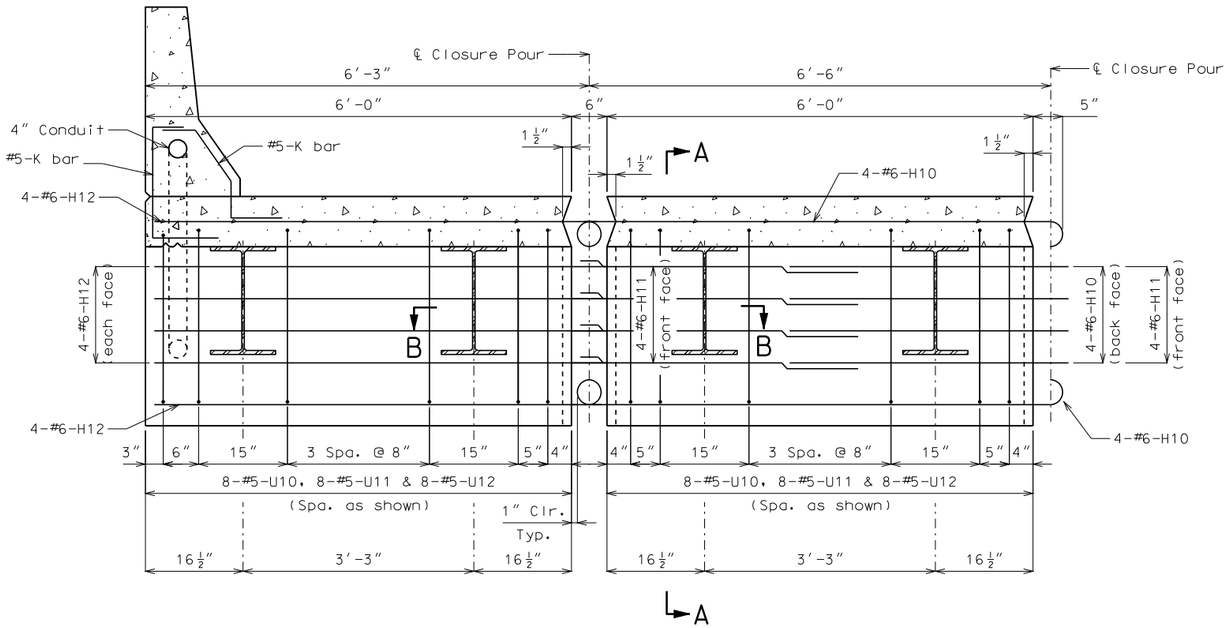

SECTION OF EXTERIOR MODULE

SECTION OF INTERIOR MODULE

(Slab reinforcement and steel details not shown for clarity)
(Conduit in West Module Barrier Curb only)

BILL OF REINFORCING STEEL LEFT EXTERIOR MODULE			
NO.	SIZE & MARK	ACTUAL LENGTH	SHAPE
28	5 S1	32′-8″	20
119	6 S2	5′-9″	20
2 sets of 5 varies	6 S3	21″ to 5′-0″	20
119	5 S4	5′-9″	20
2 sets of 5 varies	5 S5	21″ to 5′-0″	20
16	6 H12	7′-2″	17
16	5 U10	6′-9″	19
16	5 U11	3′-4″	19
16	5 U12	6′-10″	10
122	5 U13	5′-9″	60
51	5 R3	2′-3″	10
51	5 R4	2′-10′	27

BILL OF REINFORCING STEEL RIGHT EXTERIOR MODULE			
NO.	SIZE & MARK	ACTUAL LENGTH	SHAPE
28	5 S1	32′-8″	20
119	6 S2	5′-9″	20
2 sets of 5 varies	6 S3	21″ to 5′-0″	20
119	5 S4	5′-9″	20
2 sets of 5 varies	5 S5	21″ to 5′-0″	20
16	6 H12	7′-2″	17
16	5 U10	6′-9″	19
16	5 U11	3′-4″	19
16	5 U12	6′-10″	10
122	5 U13	5′-9″	60
57	5 R3	2′-3″	10
57	5 R4	2′10″	27

BILL OF REINFORCING STEEL INTERIOR MODULE			
NO.	SIZE & MARK	ACTUAL LENGTH	SHAPE
26	5 S1	32′-8″	20
119	6 S2	5′-9″	20
2 sets of 5 varies	6 S3	21″ to 5′-0″	20
119	5 S4	5′-9″	20
2 sets of 5 varies	5 S5	21″ to 5′-0″	20
12	6 H10	8′-1″	18
8	6 H11	5′-1″	17
16	5 U10	6′-9″	19
16	5 U11	3′-4″	19
16	5 U12	6′-10″	10
244	5 U13	5′-9″	60

BILL OF REINFORCING STEEL CLOSURE POUR			
NO.	SIZE & MARK	ACTUAL LENGTH	SHAPE
32	5 S1	32′-8″	20
16	5 U12	6′-10″	10

BENDING DIAGRAM

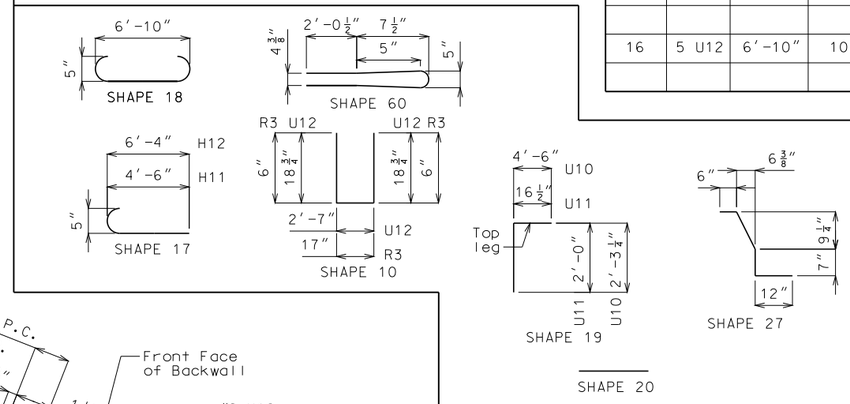

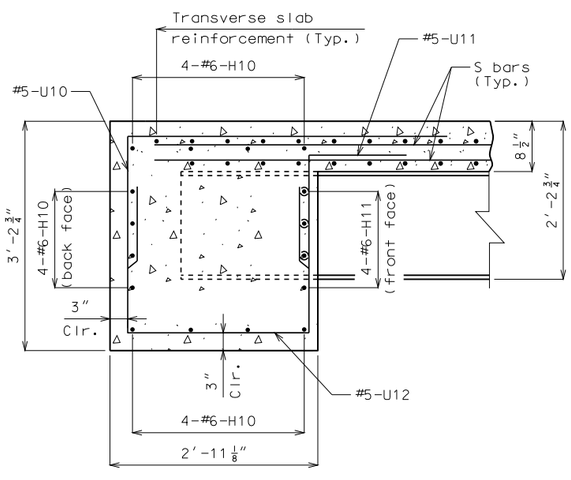

SECTION A-A

(U bars shall be placed parallel to the ℄ of the Module.)

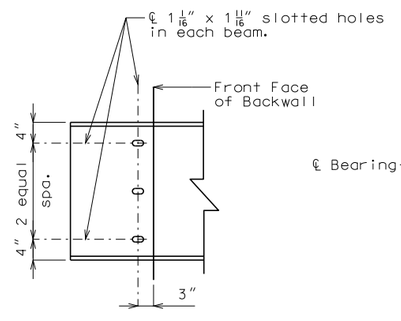

DETAIL OF WEB HOLES

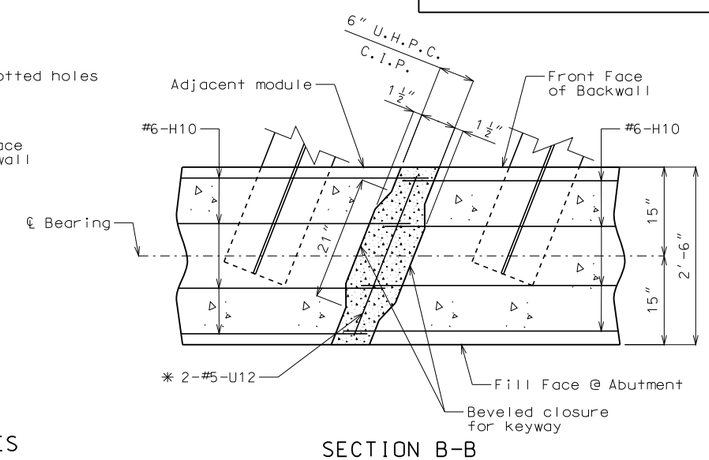

SECTION B-B
VERTICAL CLOSURE
POUR DETAIL

✳ to be placed before Closure Pour

Note:

For the K bars embedded in the exterior module for the safety barrier curb, see Sheets No. 15 & 16 and their bending diagram on Sheet No. 18.

Notes:
All reinforcing steel is to be epoxy coated.

K-bars for Barrier Curb shown on Sheets No. 15 & 16.

Suspended backwall and backwall closure pours shall be included in contract unit price for Ultra High Performance Concrete.

For details of Conduit System on Structure, see Sheet No. 17.

Bottom flange of all girders shall be horizontal when in final position.

BACKWALL REINFORCEMENT DETAILS OF SUPERSTRUCTURE MODULES

Detailed Mar. 2014
Checked Mar. 2014

Note: This drawing is not to scale. Follow dimensions.

STEEL WIDE FLANGE SUPERSTRUCTURE ALTERNATE

STATE OF MISSOURI
ANOUSONE AROUNPRADITH
NUMBER PE-29317
PROFESSIONAL ENGINEER

THIS SHEET HAS BEEN SIGNED, SEALED AND DATED ELECTRONICALLY.

DATE PREPARED	
4/16/2014	
ROUTE B	STATE MO
DISTRICT BR	SHEET NO. 12
COUNTY BOONE	
JOB NO. J5S2186	
CONTRACT ID.	
PROJECT NO.	
BRIDGE NO. A8165	

DATE	DESCRIPTION

IF A SEAL IS PRESENT ON THIS SHEET IT HAS BEEN ELECTRONICALLY SEALED AND DATED.

MISSOURI HIGHWAYS AND TRANSPORTATION COMMISSION

105 WEST CAPITOL
JEFFERSON CITY, MO 65102
1-888-ASK-MODOT (1-888-275-6636)

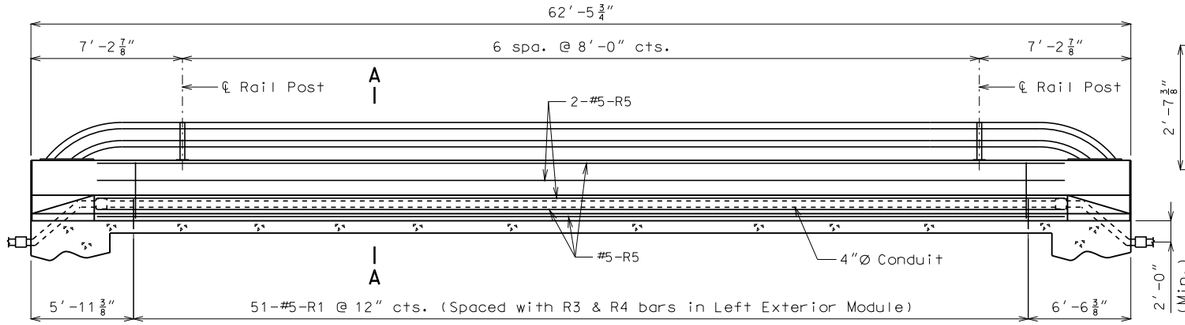

SECTION NEAR LEFT SAFETY BARRIER CURB

Note: Longitudinal dimensions are horizontal.

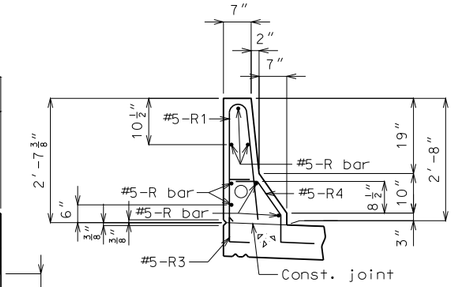

PART SECTION A-A

Notes:

Use a minimum lap of 2'-11" for #5 horizontal safety barrier curb bars.

The cross-sectional area above the slab = 2.22 sq. ft.

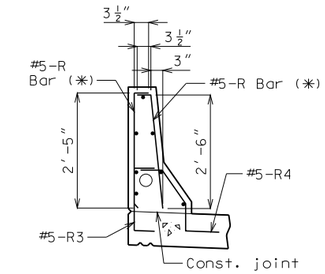

R-BAR PERMISSIBLE ALTERNATE SHAPE

(✱) The R1 bar may be separated into two bars as shown, at the contractor's option, only when slip forming is not used. (All dimensions are out to out.)

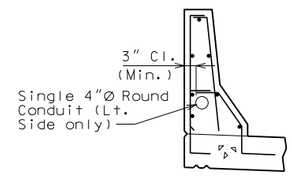

SECTION THRU SAFETY BARRIER CURB SHOWING CONDUIT

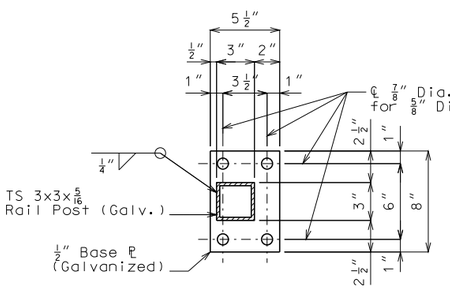

PLAN OF RAIL POST BASE PLATE

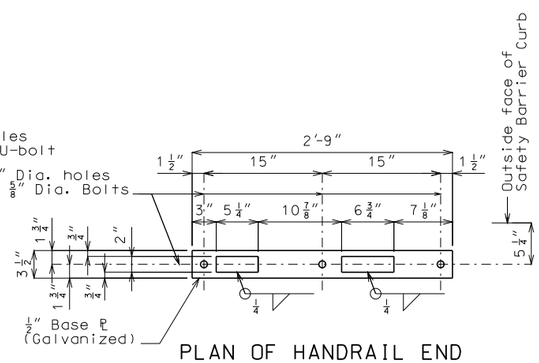

PLAN OF HANDRAIL END BASE PLATE

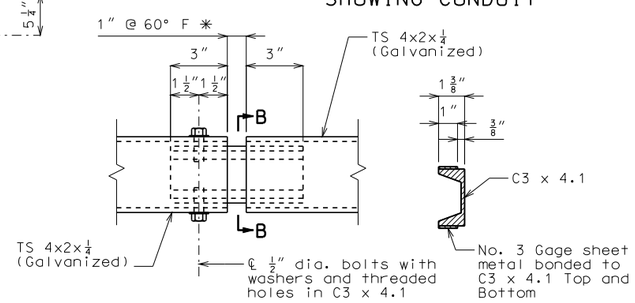

RAIL SPLICE DETAIL SECTION B-B

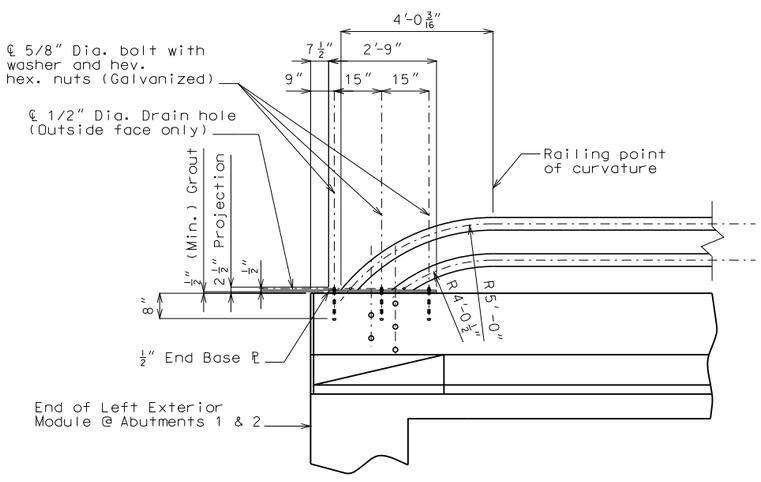

PART ELEVATION AT END OF EXTERIOR MODULE

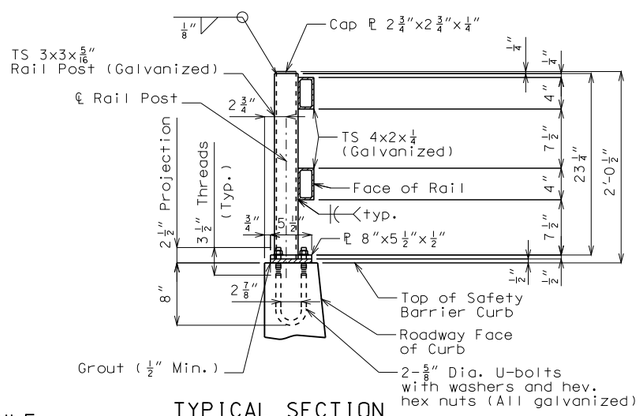

TYPICAL SECTION THRU RAIL

DETAILS OF LEFT SAFETY BARRIER CURB

Note: This drawing is not to scale. Follow dimensions.

Notes:

Top of safety barrier curb shall be built parallel to grade with barrier curb joints normal to grade.

All exposed edges of safety barrier curb shall have either a 1/2" radius or a 3/8" bevel, unless otherwise noted.

Payment for all concrete and reinforcement, complete in place, will be considered completely covered by the contract unit price for safety barrier curb per linear foot.

Concrete in the safety barrier curb shall be Class B-1.

Measurement of safety barrier curb is to the nearest linear foot for each structure, measured along the outside top of slab from end of slab to end of slab.

Concrete traffic barrier delineators shall be placed on top of the safety barrier curb as shown on Missouri Standard Plans 617.10 and in accordance with Sec 617. Delineators on bridges with two-lane, two-way traffic shall have retroreflective sheeting on both sides. Concrete traffic barrier delineators will be considered completely covered by the contract unit price for "Safety Barrier Curb".

U-bolts with heavy hex nuts and standard plate washers shall conform to ASTM A307, galvanized.

All railing, posts, bolts, nuts, washers and base plates shall be galvanized after fabrication in accordance with ASTM A123, ASTM A153 and Section 712.14 of the Missouri Standard Specifications. Vent holes shall be provided at all internally closed joints for galvanizing.

Payment for furnishing, galvanizing and installation of Bicycle Railing shall be made at the contract unit price for Bicycle Railing, per linear foot. Such payment will be full compensation for furnishing the railing, for galvanizing, installation, including the anchorage system; and for labor, materials, equipment, and incidentals to complete the work as specified and as approved by the Engineer.

Dimensions of bicycle rail are measured longitudinally.

Hollow structural steel tubing and expansion sleeves shall conform to the requirements of ASTM designation A500 Grade A.

Channels and base plates shall be fabricated from ASTM A709 grade 36 steel.

Maximum distance between rail splices shall be 32'-0".

Welding and Fabrication of structural steel shall be in accordance with Section 712 of the Missouri Standard Specifications.

✱ Gap at Rail Splice shall be increased 1/8" for each 10° fall in temperature and decreased 1/8" for each 10° rise in temperature at installation.

All rail posts shall be installed normal to grade. Grout at 1/2" minimum thickness shall be placed under base plates to provide for vertical alignment of rail posts.

For Details of Conduit System on Structure see Sheet No. 17.

STEEL WIDE FLANGE SUPERSTRUCTURE ALTERNATE

Detailed Feb. 2014
Checked Mar. 2014

STATE OF MISSOURI
ANOUSONE AROUNPRADITH
NUMBER PE-29317
PROFESSIONAL ENGINEER
THIS SHEET HAS BEEN SIGNED, SEALED AND DATED ELECTRONICALLY.

DATE PREPARED	
4/14/2014	
ROUTE B	STATE MO
DISTRICT BR	SHEET NO. 13
COUNTY BOONE	
JOB NO. J5S2186	
CONTRACT ID.	
PROJECT NO.	
BRIDGE NO. A8165	

DATE	DESCRIPTION

IF A SEAL IS PRESENT ON THIS SHEET IT HAS BEEN ELECTRONICALLY SEALED AND DATED.

MISSOURI HIGHWAYS AND TRANSPORTATION COMMISSION
105 WEST CAPITOL
JEFFERSON CITY, MO 65102
1-888-ASK-MODOT (1-888-275-6636)

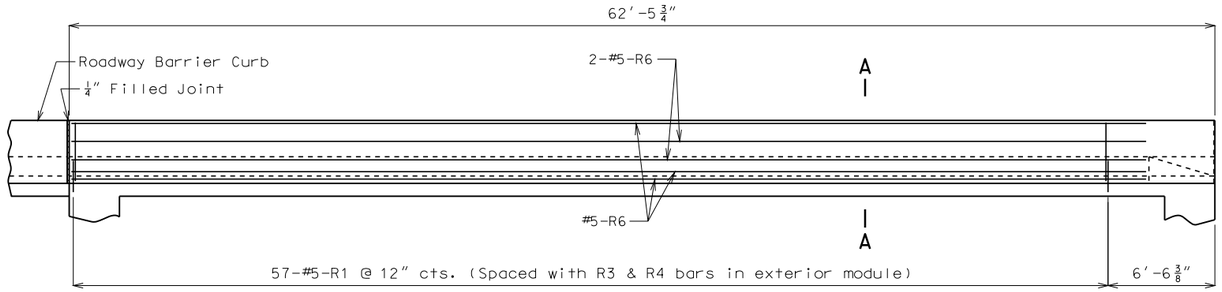

ELEVATION NEAR RIGHT SAFETY BARRIER CURB

Note: Longitudinal dimensions are horizontal.

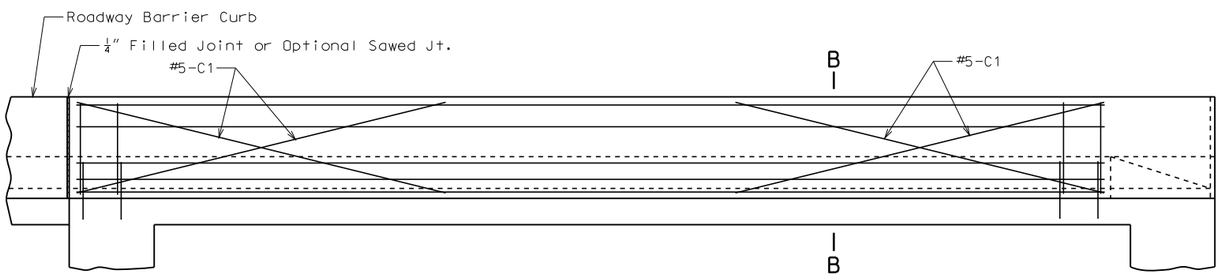

TYPICAL ELEVATION NEAR RIGHT SAFETY BARRIER CURB AT SUPPORT LOCATIONS
(OPTIONAL SLIP-FORM BRIDGE SAFETY BARRIER CURB)

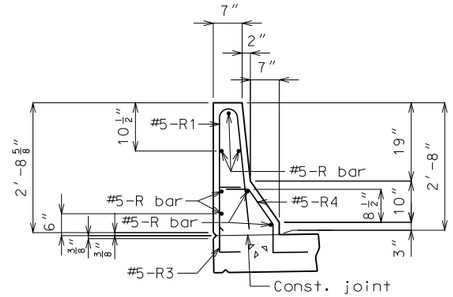

PART SECTION A-A

Notes:

Use a minimum lap of 2′-11″ for #5 horizontal safety barrier curb bars.

The cross-sectional area above the slab = 2.29 sq. ft.

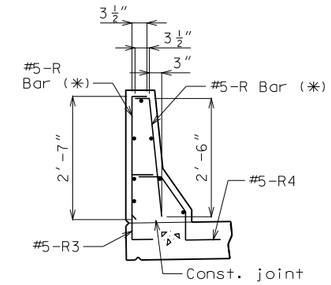

R-BAR PERMISSIBLE ALTERNATE SHAPE

(✳) The R1 bar may be separated into two bars as shown, at the contractor's option, only when slip forming is not used. (All dimensions are out to out.)

Notes:

Top of safety barrier curb shall be built parallel to grade with barrier curb joints normal to grade.

All exposed edges of safety barrier curb shall have either a 1/2″ radius or a 3/8″ bevel, unless otherwise noted.

Payment for all concrete and reinforcement, complete in place, will be considered completely covered by the contract unit price for safety barrier curb per linear foot.

Concrete in the safety barrier curb shall be Class B-1.

Measurement of safety barrier curb is to the nearest linear foot for each structure, measured along the outside top of slab from Fill Face @ Abutment No. 1 to Fill Face @ Abutment No. 2.

Concrete traffic barrier delineators shall be placed on top of the safety barrier curb as shown on Missouri Standard Plans 617.10 and in accordance with Sec 617. Delineators on bridges with two-lane, two-way traffic shall have retroreflective sheeting on both sides. Concrete traffic barrier delineators will be considered completely covered by the contract unit price for "Safety Barrier Curb".

Notes:

Joint sealant and backer rods shall be used on all slip-form barrier curbs instead of joint filler and shall be in accordance with Sec 717 for silicone joint sealant for saw cut and formed joints.

C Bars (Slip-form option only) shall be used in addition to cast-in-place conventional forming reinforcement for bridge safety barrier curb.

For Slip-Form option, all sides of the safety barrier curb shall have a vertically broomed finish and the curb top shall have a transversely broomed finish.

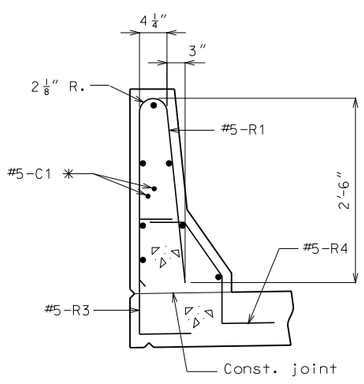

PART SECTION B-B

✳ Near each support location.

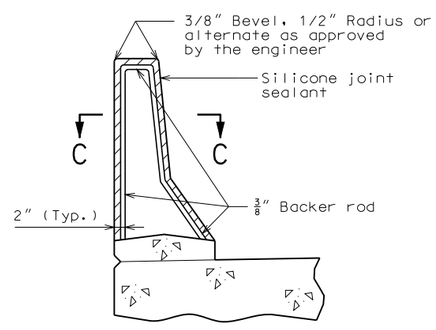

SECTION THRU JOINT

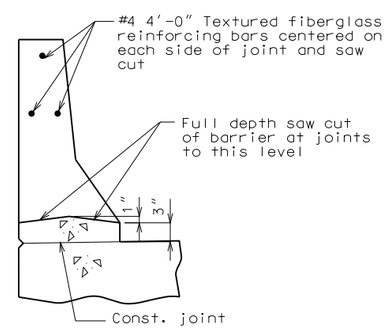

PART SECTION THRU JOINT

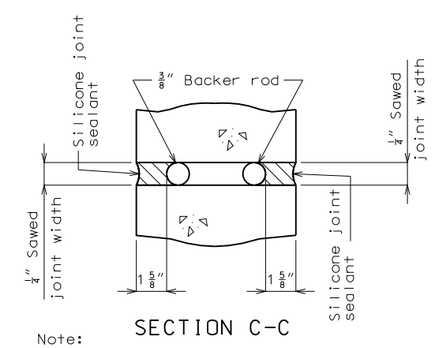

SECTION C-C

Note:

Cost of silicone joint sealant and backer rod, complete in place, will be considered completely covered by the contract unit price for Safety Barrier Curb.

DETAILS OF RIGHT SAFETY BARRIER CURB

STEEL WIDE FLANGE SUPERSTRUCTURE ALTERNATE

Detailed Mar. 2014
Checked Mar. 2014

Note: This drawing is not to scale. Follow dimensions.

STATE OF MISSOURI
ANOUSONE AROUNPRADITH
NUMBER PE-29317
PROFESSIONAL ENGINEER

THIS SHEET HAS BEEN SIGNED, SEALED AND DATED ELECTRONICALLY.

DATE PREPARED	
4/14/2014	
ROUTE B	STATE MO
DISTRICT BR	SHEET NO. 14
COUNTY BOONE	
JOB NO. J5S2186	
CONTRACT ID.	
PROJECT NO.	
BRIDGE NO. A8165	

DATE	DESCRIPTION

MISSOURI HIGHWAYS AND TRANSPORTATION COMMISSION
105 WEST CAPITOL
JEFFERSON CITY, MO 65102
1-888-ASK-MODOT (1-888-275-6636)

IF A SEAL IS PRESENT ON THIS SHEET IT HAS BEEN ELECTRONICALLY SEALED AND DATED.

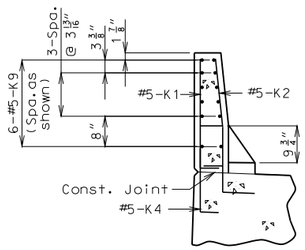

SECTION A-A

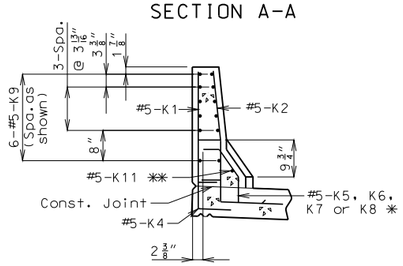

SECTION B-B

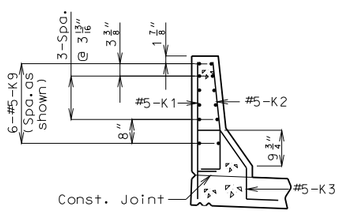

SECTION C-C

(#5-R5 Bars not shown for clarity)

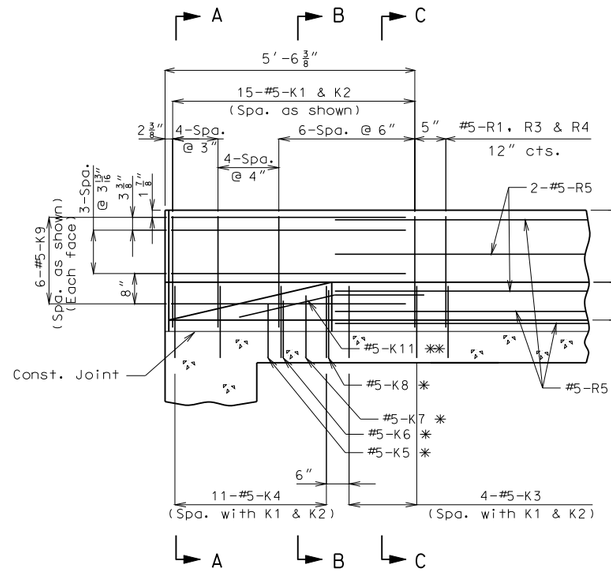

ELEVATION

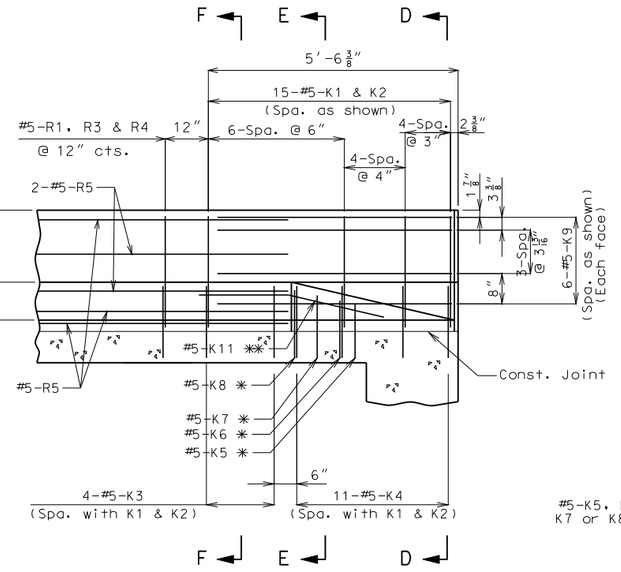

ELEVATION

✱ Spaced with #5-K4 bars with bottom leg at same elevation as the bottom leg of K4 bars.

✱✱ Fit bar to follow transition face of curb.

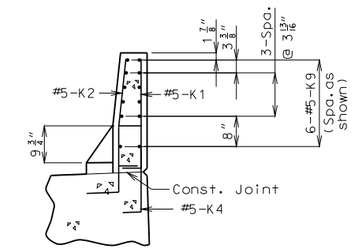

SECTION D-D

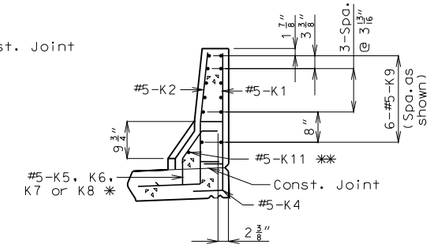

SECTION E-E

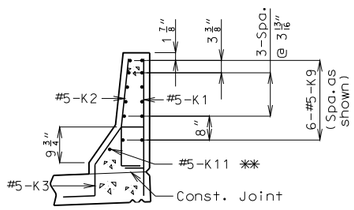

SECTION F-F

(#5-R5 Bars not shown for clarity)

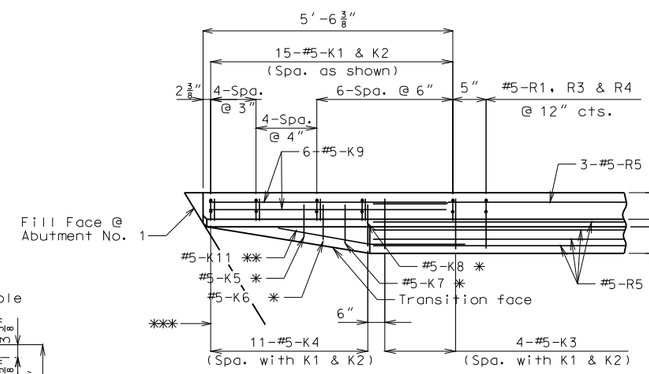

PLAN

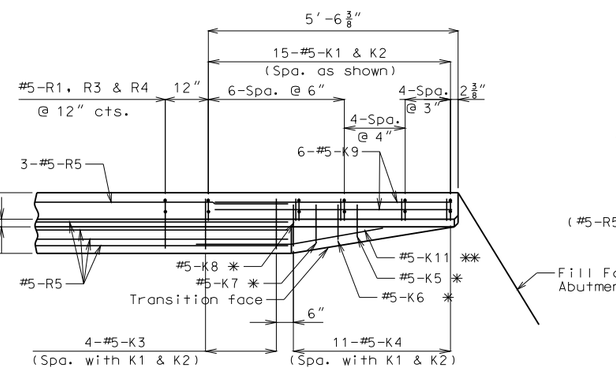

PLAN

✱✱✱ Bend horizontal leg of K4 bar in superstructure module as necessary to maintain $1\frac{1}{2}$"(min.) concrete cover.

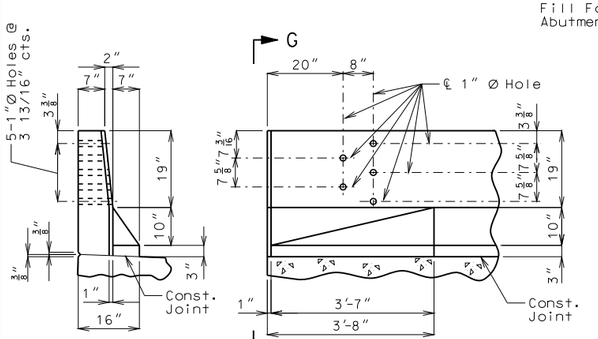

PART ELEVATION G-G

PART ELEVATION

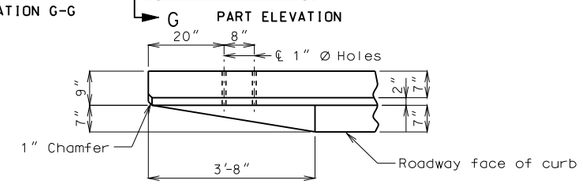

PART PLAN

DETAILS OF GUARD RAIL ATTACHMENT

NOTES: Use a minimum lap of 2'-11" between K9 and R5 bars.

Concrete traffic barrier delineators shall be placed on top of the safety barrier curb as shown on Missouri Standard Plans 617.10 and in accordance with Sec 617. Delineators on bridges with two-lane, two-way traffic shall have retroreflective sheeting on both sides. Concrete traffic barrier delineators will be considered completely covered by the contract unit price for Safety Barrier Curb.

Work this sheet with Sheets No. 10 & 13.

For Details of Conduit System on Structure, see Sheet No. 12.

DETAILS OF LEFT SAFETY BARRIER CURB AT ABUTMENTS

(Bicycle Rail not shown for clarity)

The top two K9 bars shall be kept with position close to those shown in Sections A-A thru F-F

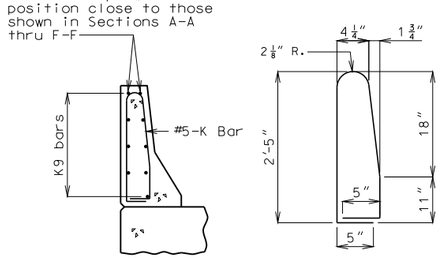

K1-K2 BAR PERMISSIBLE ALTERNATE SHAPE

(K3 or K4 thru K8 bars not shown for clarity)

The K1 and K2 bar combination may be furnished as one bar as shown, at the contractor's option.

STEEL WIDE FLANGE SUPERSTRUCTURE ALTERNATE

Detailed Feb. 2014
Checked Mar. 2014

Note: This drawing is not to scale. Follow dimensions.

STATE OF MISSOURI
ANOUSONE AROUNPRADITH
NUMBER PE-29317
PROFESSIONAL ENGINEER

THIS SHEET HAS BEEN SIGNED, SEALED AND DATED ELECTRONICALLY.

DATE PREPARED	
4/14/2014	
ROUTE: B	STATE: MO
DISTRICT: BR	SHEET NO.: 15
COUNTY: BOONE	
JOB NO.: J5S2186	
CONTRACT ID.	
PROJECT NO.	
BRIDGE NO.: A8165	

DATE	DESCRIPTION

MISSOURI HIGHWAYS AND TRANSPORTATION COMMISSION
105 WEST CAPITOL
JEFFERSON CITY, MO 65102
1-888-ASK-MODOT (1-888-275-6636)

IF A SEAL IS PRESENT ON THIS SHEET IT HAS BEEN ELECTRONICALLY SEALED AND DATED.

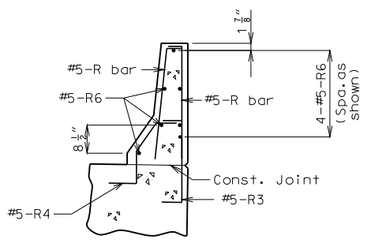

SECTION A-A

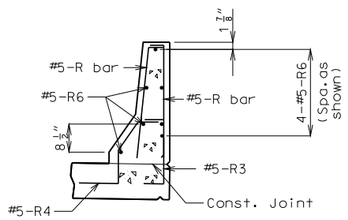

SECTION B-B

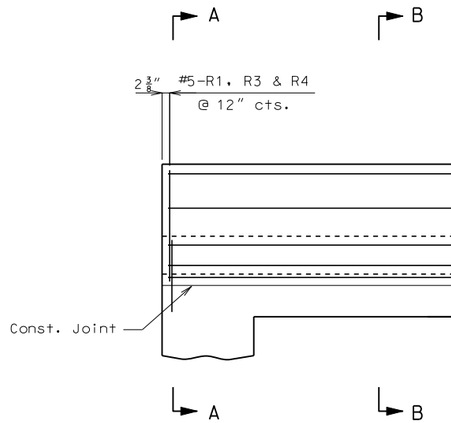

ELEVATION

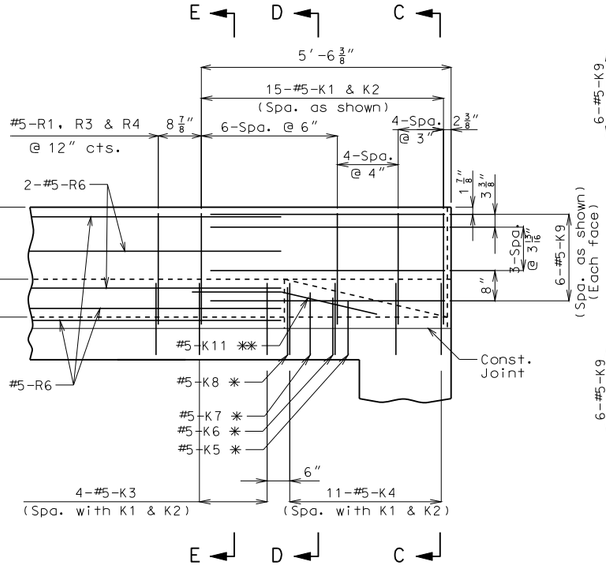

ELEVATION

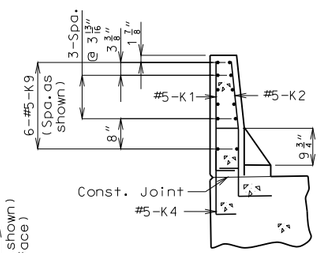

SECTION C-C

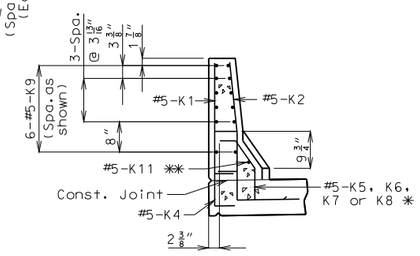

SECTION D-D

✱ Spaced with #5-K4 bars with bottom leg at same elevation as the bottom leg of K4 bars.

✱✱ Fit bar to follow transition face of curb.

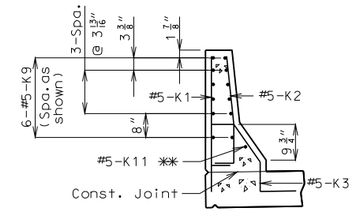

SECTION E-E

(#5-R6 Bars not shown for clarity)

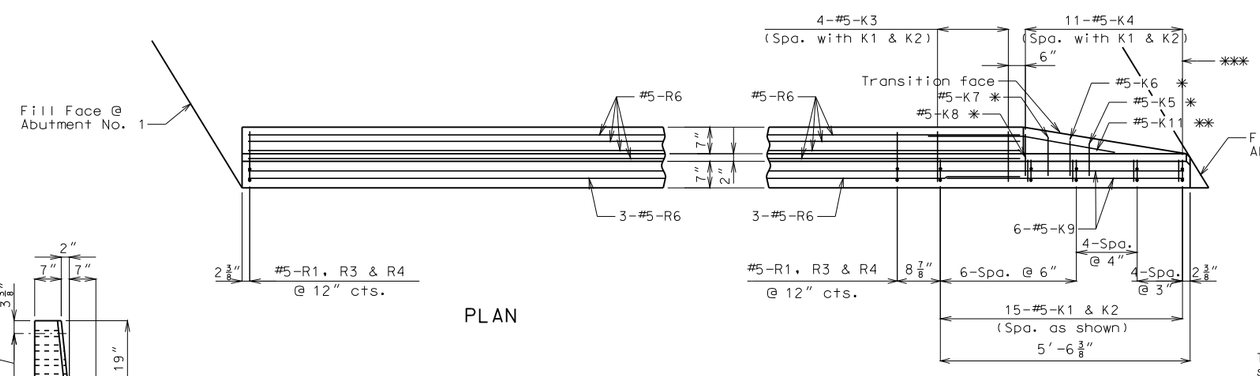

PLAN

PLAN

✱✱✱ Bend horizontal leg of K4 bar in superstructure module as necessary to maintain $1\frac{1}{2}$"(min.) concrete cover.

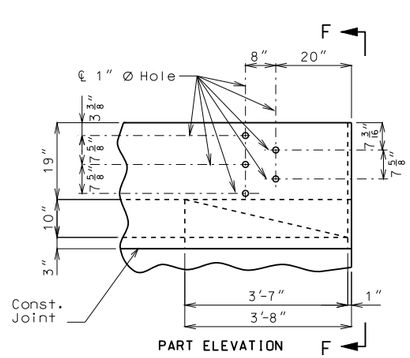

PART ELEVATION

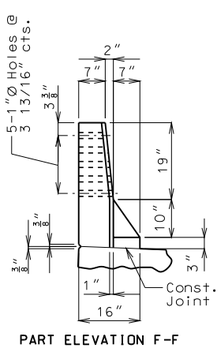

PART ELEVATION F-F

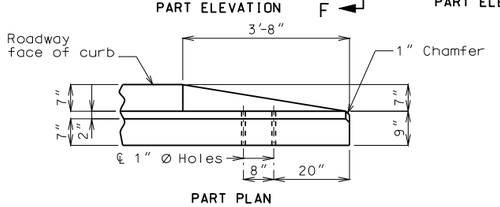

PART PLAN

DETAILS OF GUARD RAIL ATTACHMENT

The top two K9 bars shall be kept with position close to those shown in Sections C-C thru E-E

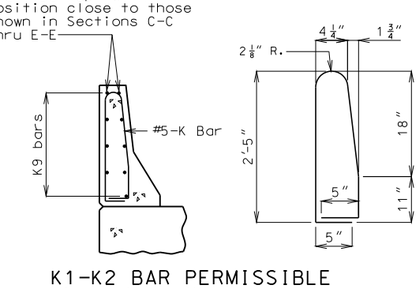

K1-K2 BAR PERMISSIBLE ALTERNATE SHAPE

(K3 or K4 thru K8 bars not shown for clarity)

The K1 and K2 bar combination may be furnished as one bar as shown, at the contractor's option.

NOTES: Use a minimum lap of 2'-11" between K9 and R6 bars.

Concrete traffic barrier delineators shall be placed on top of the safety barrier curb as shown on Missouri Standard Plans 617.10 and in accordance with Sec 617. Delineators on bridges with two-lane, two-way traffic shall have retroreflective sheeting on both sides. Concrete traffic barrier delineators will be considered completely covered by the contract unit price for Safety Barrier Curb.

Work this sheet with Sheets No. 10 & 14.

DETAILS OF RIGHT SAFETY BARRIER CURB AT ABUTMENTS

Detailed Feb. 2014
Checked Mar. 2014

Note: This drawing is not to scale. Follow dimensions.

STEEL WIDE FLANGE SUPERSTRUCTURE ALTERNATE

STATE OF MISSOURI
ANOUSONE AROUNPRADITH
NUMBER PE-29317
PROFESSIONAL ENGINEER

THIS SHEET HAS BEEN SIGNED, SEALED AND DATED ELECTRONICALLY.

DATE PREPARED	
4/14/2014	
ROUTE B	STATE MO
DISTRICT BR	SHEET NO. 16
COUNTY BOONE	
JOB NO. J5S2186	
CONTRACT ID.	
PROJECT NO.	
BRIDGE NO. A8165	

DATE	DESCRIPTION

MISSOURI HIGHWAYS AND TRANSPORTATION COMMISSION
105 WEST CAPITOL
JEFFERSON CITY, MO 65102
1-888-ASK-MODOT (1-888-275-6636)

IF A SEAL IS PRESENT ON THIS SHEET IT HAS BEEN ELECTRONICALLY SEALED AND DATED.

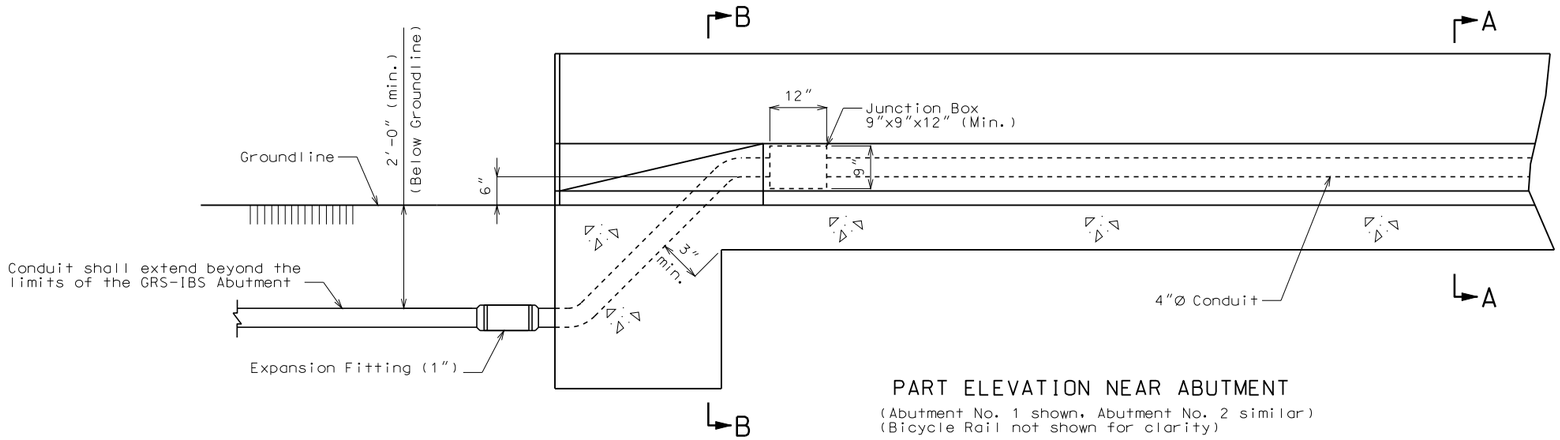

PART ELEVATION NEAR ABUTMENT

(Abutment No. 1 shown, Abutment No. 2 similar)
(Bicycle Rail not shown for clarity)

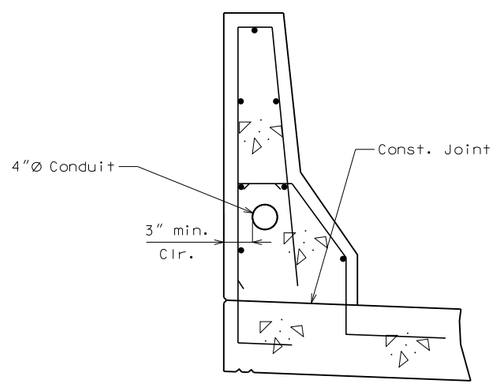

PART SECTION A-A

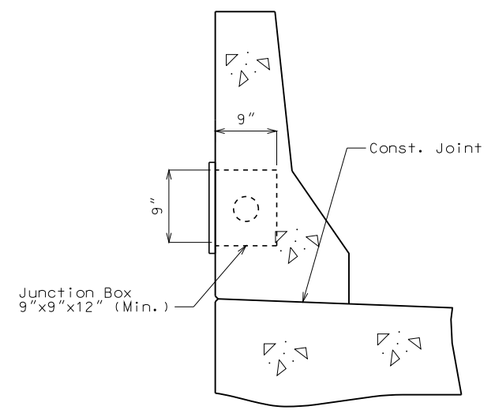

PART SECTION B-B

Notes:

All conduit shall be rigid non-metallic schedule 40 heavy wall PVC (polyvinyl chloride plastic) with 3" minimum cover in concrete. Each section of conduit shall bear the Underwriters Laboratories, (UL) label.

All safety barrier curb junction boxes shall be PVC molded in accordance with Sec 1062 and designed for flush mounting. The conduit terminations shall be permanent or separable. The terminations and covers shall be of watertight construction and shall meet requirements for NEMA 4 enclosure.

Drainage shall be provided at low points or other critical locations of all conduits and all junction boxes in accordance with Sec 707. All conduits shall be sloped to drain where possible.

Expansion fittings shall be placed as shown and set in accordance with the manufacturer's requirements and based on the air temperature at the time of setting given an estimated total expansion movement of 1" at open joints and 1" at filled joints using a maximum temperature range of 120° F and a maximum temperature of 110° F.

Shift reinforcing steel in field where necessary to clear conduit and junction boxes.

Conduit shall be placed within the GRS-IBS Abutments as to not interfere with installation of guard rail posts.

Payment for furnishing and installing Conduit System, complete-in-place, measured from the outer limits of GRS Abutment No. 1 to outer limts of Abutment No. 2, will be considered completely covered by the contract lump sum price for Conduit System on Structure.

DETAILS OF CONDUIT SYSTEM (LEFT SIDE OF STRUCTURE)

Detailed Mar. 2014
Checked Mar. 2014

Note: This drawing is not to scale. Follow dimensions.

STEEL WIDE FLANGE SUPERTRUCTURE ALTERNATE

STATE OF MISSOURI
ANOUSONE AROUNPRADITH
NUMBER PE-29317
PROFESSIONAL ENGINEER

THIS SHEET HAS BEEN SIGNED, SEALED AND DATED ELECTRONICALLY.

DATE PREPARED	4/14/2014
ROUTE	B
STATE	MO
DISTRICT	BR
SHEET NO.	17
COUNTY	BOONE
JOB NO.	J5S2186
CONTRACT ID.	
PROJECT NO.	
BRIDGE NO.	A8165

DATE	DESCRIPTION

MISSOURI HIGHWAYS AND TRANSPORTATION COMMISSION
105 WEST CAPITOL
JEFFERSON CITY, MO 65102
1-888-ASK-MODOT (1-888-275-6636)

IF A SEAL IS PRESENT ON THIS SHEET IT HAS BEEN ELECTRONICALLY SEALED AND DATED.

BILL OF REINFORCING STEEL

NO. REQ'D.	MARK NO. SIZE	MARK NO. MARK	LOCATION	EPOXY (E)	SHAPE NO.	STIRRUP (S)	SUBSTR. (X)	VARIES (V)	NO. EACH	B FT. IN.	C FT. IN.	D FT. IN.	E FT. IN.	F FT. IN.	H FT. IN.	K FT. IN.	NOMINAL LENGTH FT. IN.	ACTUAL LENGTH FT. IN.	WEIGHT LBS.
			SUPERSTR.																
			BARRIER CURB																
45	5	K1	BARRIER CURB	E	19	S				2 5.000	5.125						2 10	2 9	129
45	5	K2	BARRIER CURB	E	14	S				5.125	11.125	18.000			2.000	17.875	2 10	2 9	129
12	5	K3	BARRIER CURB	E	27	S				19.750	5.125	12.000	10.500	12.000	9.875	6.875	4 11	4 8	58
33	5	K4	BARRIER CURB	E	11	S				12.000	19.750	6.000	15.750				5 6	5 1	175
3	5	K5	BARRIER CURB	E	27	S					4.375	6.750	10.250	12.000	5.500	4.000	2 9	2 7	8
3	5	K6	BARRIER CURB	E	27	S					4.375	7.875	9.250	12.000	6.500	4.500	2 10	2 8	8
3	5	K7	BARRIER CURB	E	27	S					4.375	9.625	7.875	12.000	7.875	5.500	2 10	2 8	8
3	5	K8	BARRIER CURB	E	27	S					4.375	11.250	6.500	12.000	9.250	6.500	2 10	2 8	8
36	5	K9	BARRIER CURB	E	20					5 7.000							5 7	5 7	210
3	5	K11	BARRIER CURB	E	8					2 2.125					2 2.000	2.375	4 4	4 4	14
108	5	R1	BARRIER CURB	E	26					2 6.000	4.250	2 6.125			2 6.000	3.000	5 2	5 2	582
9	5	R5	BARRIER CURB	E	20					56 11.000							56 11	56 11	534
7	5	R6	BARRIER CURB	E	20					59 9.000							59 9	59 9	436
			SLIP FORM																
4	5	C1	SLIP FORM	E	20					10 0.000							10 0	10 0	42
			TOTALS																
	5			E															2341
			TOTAL																0
			TOTAL	E															2341
			Safety Barrier Curb																
	5			E															2299
			TOTAL																2299
			Slip Form Option																
	5			E															42
			TOTAL																42

BILL OF REINFORCING STEEL

NO. REQ'D.	MARK NO. SIZE	MARK NO. MARK	LOCATION	EPOXY (E)	SHAPE NO.	STIRRUP (S)	SUBSTR. (X)	VARIES (V)	NO. EACH	B FT. IN.	C FT. IN.	D FT. IN.	E FT. IN.	F FT. IN.	H FT. IN.	K FT. IN.	NOMINAL LENGTH FT. IN.	ACTUAL LENGTH FT. IN.	WEIGHT LBS.

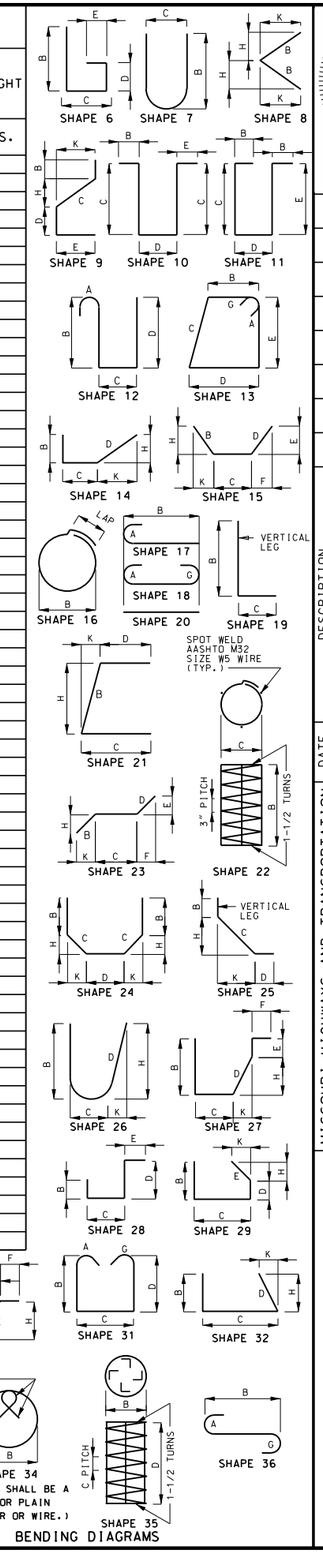

BENDING DIAGRAMS

STATE OF MISSOURI
ANOUSONE AROUNPRADITH
NUMBER PE-29317
PROFESSIONAL ENGINEER

THIS SHEET HAS BEEN SIGNED, SEALED AND DATED ELECTRONICALLY.

DATE PREPARED	
4/14/2014	
ROUTE B	STATE MO
DISTRICT BR	SHEET NO. 18
COUNTY BOONE	
JOB NO. J5S2186	
CONTRACT ID.	
PROJECT NO.	
BRIDGE NO. A8165	

DESCRIPTION

DATE

MISSOURI HIGHWAYS AND TRANSPORTATION COMMISSION

105 WEST CAPITOL
JEFFERSON CITY, MO 65102
1-888-ASK-MODOT (1-888-275-6636)

IF A SEAL IS PRESENT ON THIS SHEET IT HAS BEEN ELECTRONICALLY SEALED AND DATED.

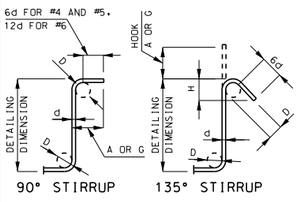

STIRRUP HOOK DIMENSIONS				
GRADES 40 - 50 - 60 KSI				
BAR SIZE	D (IN.)	90° HOOK	135° HOOK	
		HOOK A OR G	HOOK A OR G	APPROX. H
#4	2"	4 1/2"	4 1/2"	3"
#5	2 1/2"	6"	5 1/2"	3 3/4"
#6	4 1/2"	12"	8"	4 1/2"

NOTE: UNLESS OTHERWISE NOTED, DIAMETER "D" IS THE SAME FOR ALL BENDS AND HOOKS ON A BAR.

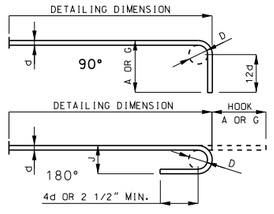

END HOOK DIMENSIONS				
BAR SIZE	D (IN.)	ALL GRADES		
		180° HOOKS		90° HOOKS
		A OR G	J	A OR G
#3	2 1/4"	5"	3"	6"
#4	3"	6"	4"	8"
#5	3 3/4"	7"	5"	10"
#6	4 1/2"	8"	6"	12"
#7	5 1/4"	10"	7"	14"
#8	6"	11"	8"	16"
#9	9 1/2"	15"	11 3/4"	19"
#10	10 3/4"	17"	13 1/4"	22"
#11	12"	19"	14 3/4"	2'-0"
#14	18 1/4"	2'-3"	21 3/4"	2'-7"

TWO ADDITIONAL #5-R5 ARE INCLUDED IN THE BAR BILL FOR TESTING.

NOTE:
ALL STANDARD HOOKS AND BENDS OTHER THAN 180 DEGREE ARE TO BE BENT WITH SAME PROCEDURE AS FOR 90 DEGREE STANDARD HOOKS.
HOOKS AND BENDS SHALL BE IN ACCORDANCE WITH THE PROCEDURES AS SHOWN ON THIS SHEET.
E = EPOXY COATED REINFORCEMENT.
S = STIRRUP.
X = BAR IS INCLUDED IN SUBSTRUCTURE QUANTITIES.
V = BAR DIMENSIONS VARY IN EQUAL INCREMENTS BETWEEN DIMENSIONS SHOWN ON THIS LINE AND THE FOLLOWING LINE.
NO. EA. = NUMBER OF BARS OF EACH LENGTH.
NOMINAL LENGTHS ARE BASED ON OUT TO OUT DIMENSIONS SHOWN IN BENDING DIAGRAMS AND ARE LISTED FOR FABRICATORS USE. (NEAREST INCH)
ACTUAL LENGTHS ARE MEASURED ALONG CENTERLINE BAR TO THE NEAREST INCH.
PAYWEIGHTS ARE BASED ON ACTUAL LENGTHS.
FOUR ANGLE OR CHANNEL SPACERS ARE REQUIRED FOR EACH COLUMN SPIRAL. SPACERS ARE TO BE PLACED ON INSIDE OF SPIRALS. LENGTH AND WEIGHT OF COLUMN SPIRALS DO NOT INCLUDE SPLICES OR SPACERS.
REINFORCING STEEL (GRADE 60) FY = 60,000 PSI.

Detailed Mar. 2014
Checked Mar. 2014

Note: This drawing is not to scale. Follow dimensions.

STEEL WIDE FLANGE SUPERSTRUCTURE ALTERNATE

Missouri Department of Transportation
Construction and Materials

BORING NO. O-13-48

Job No.: J5S2186	County: Boone	Route: B	Logged By: Thomas Fennessey
Design:	Skew: 32° RA	Coordinate Units: U.S. Survey Feet	Operator: Ray Murray
Bent: 1	Location: Columbia, MO	Coordinate Proj. Factor: 1.0000958	Date of Work: 05/29/13-05/29/13
Station: 13+93.5	Northing: 1139964.1	Coordinate System: Modified U.S. State Plane 1983	Depth to Water: 0
Offset: 21.3L	Easting: 1694109.8	Coordinate Datum: NAD 83 (CONUS)	Time Change: 19 hours
Elevation: 768.5	Drilling Method: Hollow Stem Auger	Coordinate Zone: Missouri Central	Depth Hole Open: 15.2
Drill No.: G-9462	Hammer Efficiency: 69%	Equipment: Acker Soil XLS ,Split-Spoon Sampler, Shelby Tube, NX	

Depth (ft)	Description	Elevation (ft)	Sample Type	REC % (RQD %)	Blow Counts (N_{60})	Pocket Pen (tsf)	Torvane (tsf)	Saturated Unit Weight (pcf)(1)	Moisture Content (%)	Liquid Limit	Plasticity Index	USCS	Shear Data	Consolidation Parameters P_c (ksf)	P_o (ksf)	P_2 (ksf)	e_1	e_c	e_2	C_c	C_r (ft^2/d)
0	0-1' Brown, LEAN CLAY, medium stiff to stiff, wet to moist																				
	1-24.6' Yellowish brown to tannish gray, LEAN CLAY, very stiff, moist 1-4.5' occasional silty fine sand seams			93	4-10-9 (22)	2.00		133.3	18												
				89		2.75	1.83	132.7	18	42	27		Qu Test Results MC = 22.3% γ_{moist} = 128.1 pcf								
	6.8' Shelby tube refusal	760		73	5-9-12 (24)	3.50		137.1	15												
10	10.5' Recompression Index = 0.020			75		3.25	2.15	127.3	15 23	42	24			1.31	5.74		0.416	0.403		0.167	
	11.6' Shelby tube refusal 12.2-12.9' rock fragments 12.4' SPT refusal			100	8-44/0.2'	4.50+		136.4	15												
				80		4.50+	2.02	135.1	16	30	12		Qu Test Results UCS = 6.2 ksf MC = 16.5% γ_{moist} = 126.2 pcf								
	16.5' Shelby tube refusal	750		100	7-10-13 (26)	3.50		136.9	15												
20	21' Recompression Index = 0.014 21.9' Shelby tube refusal			84		4.50	2.00	135.0	16 15	35	18			2.72	6.25		0.385	0.38		0.143	
				100	7-10-14 (28)	4.25		135.8	16												
	24.6-25.3' Gray and tan, LEAN CLAY with sand, hard, wet			91		4.50+	1.35	137.1	15	31	16										
	25.3-25.7' Gray, CLAYEY SAND, dense, wet			40	10-6-6 (14)	4.50															
	25.7-28.9' Gray and tan, LEAN CLAY with sand, hard, wet 26.1' Shelby tube refusal	740																			
30	28.9-30.3' Limestone, moderately weathered																				
	30.3-31.9' Limestone, grayish brown, thin to medium bedded, medium hard, moderately weathered to slightly weathered 30.3-35.3' RQD 75% on limestone portion only			98																	

(1) = Assumed, (2) = Actual

(Continued Next Page)

Missouri Department of Transportation
Construction and Materials

BORING NO. O-13-48

Job No.: J5S2186	County: Boone	Route: B	Logged By: Thomas Fennessey
Design:	Skew: 32° RA	Coordinate Units: U.S. Survey Feet	Operator: Ray Murray
Bent: 1	Location: Columbia, MO	Coordinate Proj. Factor: 1.0000958	Date of Work: 05/29/13-05/29/13
Station: 13+93.5	Northing: 1139964.1	Coordinate System: Modified U.S. State Plane 1983	Depth to Water: 0
Offset: 21.3L	Easting: 1694109.8	Coordinate Datum: NAD 83 (CONUS)	Time Change: 19 hours
Elevation: 768.5	Drilling Method: Hollow Stem Auger	Coordinate Zone: Missouri Central	Depth Hole Open: 15.2
Drill No.: G-9462	Hammer Efficiency: 69%	Equipment: Acker Soil XLS ,Split-Spoon Sampler, Shelby Tube, NX	

Depth (ft)	Description	Elevation (ft)	Sample Type	REC % (RQD %)	Blow Counts (N_{60})	Pocket Pen (tsf)	Torvane (tsf)	Saturated Unit Weight (pcf)(1)	Moisture Content (%)	Liquid Limit	Plasticity Index	USCS	Shear Data	Consolidation Parameters P_c (ksf)	P_o (ksf)	P_2 (ksf)	e_1	e_c	e_2	C_c	C_r (ft^2/d)
	31.9-32.9' Shale, greenish gray, extremely soft																				
	32.9-34.8' Bituminous Coal, black 33.7-33.9' limestone	730		100		7.50															
40	34.8-39.7' Shale, gray, extremely soft to very soft *(continued)*																				
	39.7-42.5' Limestone, gray, thin to medium bedded, medium hard, slightly weathered 39.8-44.8' RQD 71% on limestone portion only			100																	
	42.5-55' Shale, gray, extremely soft to very soft					9.00+															
		720		76		7.00															
50						9.00+															
				78																	
	54.8-59.8' RQD 100% on dolomite portion only																				
	55-57.8' Shale, greenish gray, very soft																				
	57.8-59.3' Dolomite, tan, moderately hard	710		62																	
	59.3-59.8' Shale, gray, extremely soft to very soft																				
	Bottom of borehole at 59.8 feet.																				

(1) = Assumed, (2) = Actual

STATE OF MISSOURI
ANOUSONE AROUNPRADITH
NUMBER PE-29317
PROFESSIONAL ENGINEER

THIS SHEET HAS BEEN SIGNED, SEALED AND DATED ELECTRONICALLY.

DATE PREPARED	
4/14/2014	
ROUTE: B	STATE: MO
DISTRICT: BR	SHEET NO.: 19
COUNTY: BOONE	
JOB NO.: J5S2186	
CONTRACT ID.	
PROJECT NO.	
BRIDGE NO.: A8165	

DATE	DESCRIPTION

MISSOURI HIGHWAYS AND TRANSPORTATION COMMISSION
105 WEST CAPITOL
JEFFERSON CITY, MO 65102
1-888-ASK-MODOT (1-888-275-6636)

IF A SEAL IS PRESENT ON THIS SHEET IT HAS BEEN ELECTRONICALLY SEALED AND DATED.

CONSOLIDATION PARAMETERS - MISSOURI DOT.GDT - 9/18/13 09:48 - J:\SGVGINTPROJECT FILES\J5S2186-A8165.GPJ

CONSOLIDATION PARAMETERS - MISSOURI DOT.GDT - 9/18/13 09:49 - J:\SGVGINTPROJECT FILES\J5S2186-A8165.GPJ

BORING DATA

Note: For locations of borings, see Sheet No. 1.

Detailed Mar. 2014
Checked Mar. 2014

Note: This drawing is not to scale. Follow dimensions.

STEEL WIDE FLANGE SUPERSTRUCTURE ALTERNATE

Missouri Department of Transportation
Construction and Materials

BORING NO. O-13-49

Job No.: J5S2186	**County:** Boone	**Route:** B	**Logged By:** Thomas Fennessey
Design:	**Skew:** 32° RA	**Coordinate Units:** U.S. Survey Feet	**Operator:** Ray Murray
Bent: 2	**Location:** Columbia, MO	**Coordinate Proj. Factor:** 1.0000958	**Date of Work:** 05/30/13-05/30/13
Station: 14+57.5	**Northing:** 1140012.3	**Coordinate System:** Modified U.S. State Plane 1983	**Depth to Water:**
Offset: 27.0R	**Easting:** 1694192.9	**Coordinate Datum:** NAD 83 (CONUS)	**Time Change:** 0 hours
Elevation: 766.8	**Drilling Method:** Hollow Stem Auger	**Coordinate Zone:** Missouri Central	**Depth Hole Open:**
Drill No.: G-9462	**Hammer Efficiency:** 69%	**Equipment:** Acker Soil XLS ,Split-Spoon Sampler, Shelby Tube, NX	

Depth (ft)	Graphic	Description	Elevation (ft)	Sample Type	REC % (RQD %)	Blow Counts (N_{60})	Pocket Pen (tsf)	Torvane (tsf)	Saturated Unit Weight (pcf)(1)	Moisture Content (%)	Liquid Limit	Plasticity Index	USCS	Shear Data	Consolidation Parameters: P_c (ksf)	P_o (ksf)	P_2 (ksf)	e_1	e_c	e_2	C_c	C_r (ft^2/d)
0		0-3.4' Brown, LEAN CLAY and cobbles, stiff, moist																				
		3.4-5' Yellowish brown, LEAN CLAY, stiff to very stiff, moist																				
		5-5.7' Yellowish brown, SANDY LEAN CLAY to fine sand, stiff, moist	760		92		4.50+	2.25+	134.3	17 18	38	23		Qu Test Results UCS = 6.88 ksf MC = 17.3% γ_{moist} = 136.5 pcf								
		5.7-26.2' Tan to tannish gray, LEAN CLAY, very stiff to hard, moist, occasional sand seams and pockets			100	7-6-10 (18)	3.50		134.7	17												
10					85		4.50+	2.25+	136.1	16	30	13		Qu Test Results UCS = 10 ksf MC = 16.2% γ_{moist} = 135.1 pcf								
		11.3' Shelby tube refusal			100	7-14-16 (35)	4.50+		135.7	16												
		16.3' Recompression Index = 0.010	750		95		4.25	2.25+	135.6	17 16	31	16		Qu Test Results UCS = 6.24 ksf MC = 16% γ_{moist} = 132.9 pcf	2.04	6.1		0.451	0.434		0.144
		17.1' Shelby tube refusal			100	10-10-14 (28)	4.0		135.0	16												
20					38		3.00	2.25+	136.2	15	27	12										
		20.8' Shelby tube refusal			0	17-19-23 (48)																
					100		3.75		135.6	16	40	20										
		25.7' Shelby tube refusal	740		100	35-44/0.2'	4.50+		136.1	16												
		26.2-27.8' Limestone, moderately weathered 26.4' SPT refusal			95		3.00															
30		27.8-29.6' Limestone, light gray to gray, thin to medium bedded, medium hard, moderately weathered to slightly weathered 27.8-29.9' RQD 72% on limestone portion only			78																	
		29.6-29.9' Shale, greenish gray, extremely soft					9.00+															

(1) = Assumed, (2) = Actual

(Continued Next Page)

Job No.: J5S2186	**County:** Boone	**Route:** B	**Logged By:** Thomas Fennessey
Design:	**Skew:** 32° RA	**Coordinate Units:** U.S. Survey Feet	**Operator:** Ray Murray
Bent: 2	**Location:** Columbia, MO	**Coordinate Proj. Factor:** 1.0000958	**Date of Work:** 05/30/13-05/30/13
Station: 14+57.5	**Northing:** 1140012.3	**Coordinate System:** Modified U.S. State Plane 1983	**Depth to Water:**
Offset: 27.0R	**Easting:** 1694192.9	**Coordinate Datum:** NAD 83 (CONUS)	**Time Change:** 0 hours
Elevation: 766.8	**Drilling Method:** Hollow Stem Auger	**Coordinate Zone:** Missouri Central	**Depth Hole Open:**
Drill No.: G-9462	**Hammer Efficiency:** 69%	**Equipment:** Acker Soil XLS ,Split-Spoon Sampler, Shelby Tube, NX	

Depth (ft)	Graphic	Description	Elevation (ft)	Sample Type	REC % (RQD %)	Blow Counts (N_{60})	Pocket Pen (tsf)	Torvane (tsf)	Saturated Unit Weight (pcf)(1)	Moisture Content (%)	Liquid Limit	Plasticity Index	USCS	Shear Data	Consolidation Parameters: P_c (ksf)	P_o (ksf)	P_2 (ksf)	e_1	e_c	e_2	C_c	C_r (ft^2/d)
		29.9-33.2' Bituminous Coal, black 34.4-39.9' RQD 58% on limestone portion only 33.2-38' Shale, gray, extremely soft *(continued)*	730		90		9.00															
		38-39.9' Limestone, gray, thin to medium bedded, medium hard																				
		Bottom of borehole at 39.9 feet.																				

(1) = Assumed, (2) = Actual

CONSOLIDATION PARAMETERS - MISSOURI DOT.GDT - 9/18/13 09:49 - J:\SGVGINTPROJECT FILES\J5S2186-A8165.GPJ

STATE OF MISSOURI
ANOUSONE AROUNPRADITH
NUMBER PE-29317
PROFESSIONAL ENGINEER

THIS SHEET HAS BEEN SIGNED, SEALED AND DATED ELECTRONICALLY.

DATE PREPARED	
4/14/2014	
ROUTE: B	STATE: MO
DISTRICT: BR	SHEET NO.: 20
COUNTY: BOONE	
JOB NO.: J5S2186	
CONTRACT ID.	
PROJECT NO.	
BRIDGE NO.: A8165	

DATE	DESCRIPTION

MISSOURI HIGHWAYS AND TRANSPORTATION COMMISSION
105 WEST CAPITOL
JEFFERSON CITY, MO 65102
1-888-ASK-MODOT (1-888-275-6636)

IF A SEAL IS PRESENT ON THIS SHEET IT HAS BEEN ELECTRONICALLY SEALED AND DATED.

BORING DATA

Note: For locations of borings, see Sheet No. 1.

Detailed Mar. 2014
Checked Mar. 2014

Note: This drawing is not to scale. Follow dimensions.

STEEL WIDE FLANGE SUPERSTRUCTURE ALTERNATE

Missouri Department of Transportation
1617 Mo. Blvd.
Jefferson City, Mo. 65109

KEY TO SYMBOLS

CLIENT MoDOT Bridge Division
PROJECT NAME Route B (Paris Road) over Business Loop 70
PROJECT NUMBER J5S2186
PROJECT LOCATION Columbia, MO

LITHOLOGIC SYMBOLS
(Unified Soil Classification System)

- CL: USCS Low Plasticity Clay
- CLG: USCS Low Plasticity Gravelly Clay
- CLS: USCS Low Plasticity Sandy Clay
- COAL: Coal
- DOLOMITE: Dolomite
- LIMESTONE: Limestone
- SC: USCS Clayey Sand
- SHALE: Shale

SAMPLER SYMBOLS

- Rock Core
- Split-Spoon Sampler
- Shelby Tube

WELL CONSTRUCTION SYMBOLS

ABBREVIATIONS

LL - LIQUID LIMIT (%)
PI - PLASTIC INDEX (%)
W - MOISTURE CONTENT (%)
DD - DRY DENSITY (PCF)
NP - NON PLASTIC
-200 - PERCENT PASSING NO. 200 SIEVE
PP - POCKET PENETROMETER (TSF)

TV - TORVANE
PID - PHOTOIONIZATION DETECTOR
UC - UNCONFINED COMPRESSION
ppm - PARTS PER MILLION

Water Level at Time of Drilling
Water Level at End of Drilling
Water Level after Drilling

KEY TO SYMBOLS - MISSOURI DOT.GDT - 9/18/13 09:49 - J:\SG\GINT\PROJECT FILES\J5S2186-A8165.GPJ

STATE OF MISSOURI
ANOUSONE AROUNPRADITH
NUMBER PE-29317
PROFESSIONAL ENGINEER

THIS SHEET HAS BEEN SIGNED, SEALED AND DATED ELECTRONICALLY.

DATE PREPARED 4/14/2014
ROUTE B | STATE MO
DISTRICT BR | SHEET NO. 21
COUNTY BOONE
JOB NO. J5S2186
CONTRACT ID.
PROJECT NO.
BRIDGE NO. A8165

DESCRIPTION | DATE

MISSOURI HIGHWAYS AND TRANSPORTATION COMMISSION
105 WEST CAPITOL
JEFFERSON CITY, MO 65102
1-888-ASK-MODOT (1-888-275-6636)

IF A SEAL IS PRESENT ON THIS SHEET IT HAS BEEN ELECTRONICALLY SEALED AND DATED.

BORING DATA

Note: For locations of borings, see Sheet No. 1.

Detailed Mar. 2014
Checked Mar. 2014

Note: This drawing is not to scale. Follow dimensions.

STEEL WIDE FLANGE SUPERSTRUCTURE ALTERNATE